MEGASEW
Industrial sewing machine

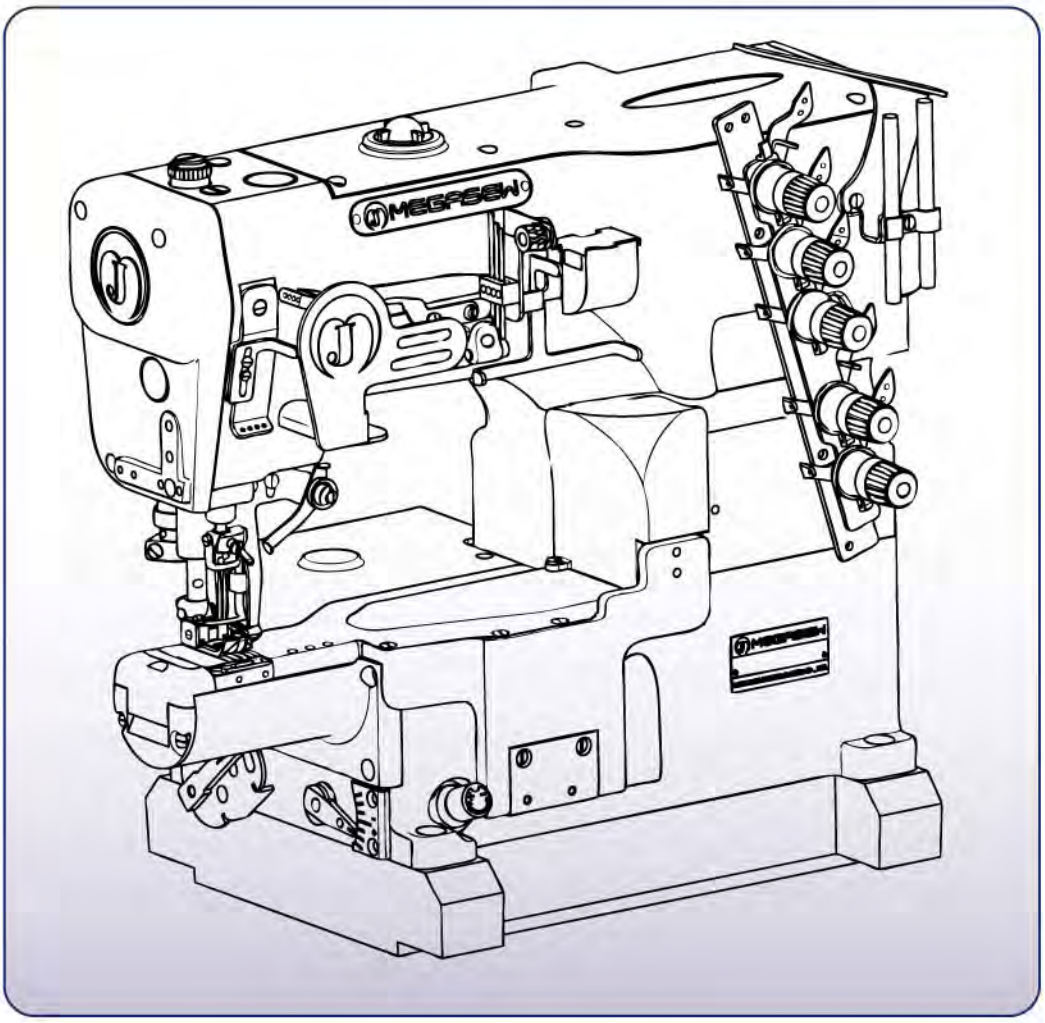

MJ2600S&MJ2600SD

零 件 本

PARTS BOOK

名 匠 縫 紉 機 股 份 有 限 公 司
MING JANG SEWING MACHINE CO.,LTD.

CONTENTS 目 次

MACHINE BED FRAME	縫紉機本體	1
BUSHINGS MECHANISM	套管機構	2
COVER (1)	蓋（1）	3
COVER (2)	蓋（2）	4
CRANK SHAFT DRIVE MECHANISM (1)	下軸機構（1）	5
ARM SHAFT MECHANISM	上軸機構	6
NEEDLE BAR, NEEDLE GUARD MECHANISM	針棒，針受機構	7
LOOPER DRIVE MECHANISM	彎針機構	8
FEED MECHANISM	送布機構	9
CRANK SHAFT DRIVE MECHANISM (2)	下軸機構（2）	10
SERVO MOTOR	伺服馬達機構	11
PRESSER FOOT MECHANISM	壓腳機構	12
SPREADER MECHANISM	上飾線機構	13
THREAD TENSION MECHANISM	線鬆緊調整機構	14
NEEDLE & SPREADER THREADING MECHANISM	針及上飾線過線機構	15
LOOPER THREADING MECHANISM	彎針過線機構	16
LUBRICATION MECHANISM (1)	給油機構（1）	17
LUBRICATION MECHANISM (2)	給油機構（2）	18
COOLING DEVICE	冷卻裝置	19
ACCESSORIES BOX	附件盒	20
HEMMING DEVICE	折下擺配件	22
ELECTRIC (PNEUMATIC) TYPE PRESSER FOOT LIFTER	電磁(氣動)式抬壓腳組	23
UNDER THREAD TRIMMER MECHANISM	下切線刀機構	24
ELECTRIC (PNEUMATIC) TYPE UNDER THREAD TRIMMER MECHANISM	電磁(氣動)式下切刀機構	25
ELECTRIC (PNEUMATIC) TYPE TOP THREAD WIPER MECHANISM	電磁(氣動)式上撥線機構	26
THREAD STAND	線架組	27
ACCESSORIES BOX	附件盒	28
MR (FABRIC TRIMMER) DEVICE	MR 修布邊裝置	29
REAR PULLER ASSEMBLY	後拖輪組	30
STITCH CONDENSE DEVICE	密縫專用	31
ELECTRIC (PNEUMATIC) TYPE TOP THREAD TRIMMER MECHANISM	電磁(氣動)式上切刀機構	32

1

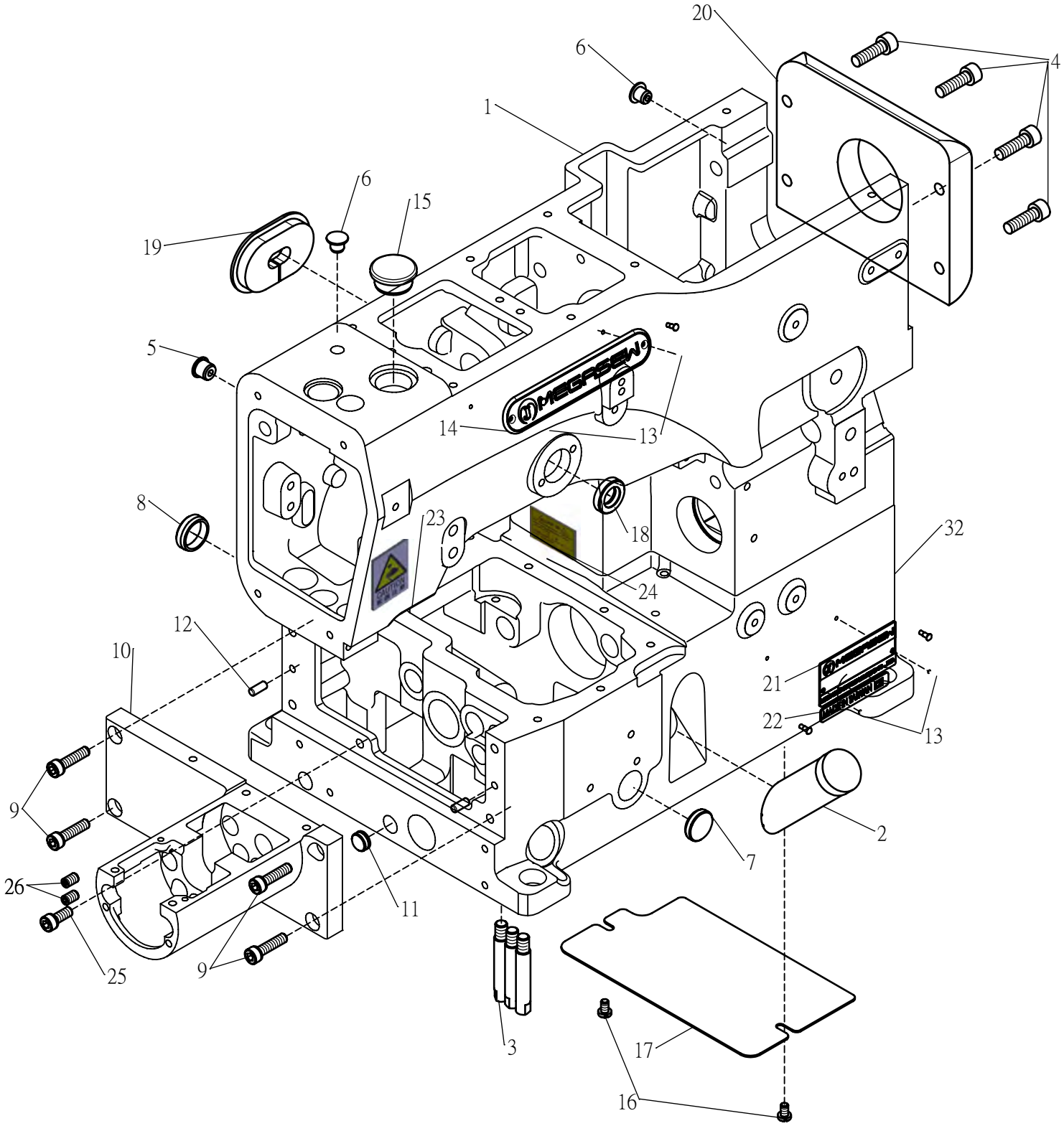

Ref. No.	Parts No.	Description	品　　名	Amt. Req.
1	W1-1	Machine Frame	機殼	1
2	W1-2	Oil Sight Gauge	油量視鏡	1
3	W1-3	Bed Pin (1/4-24X9)	機台支撐梢	3
4	W1-4	Screw (M6-1X20)	螺絲	4
5	W1-5	Plug	孔塞	1
6	W1-6	Plug	孔塞	2
7	W1-7	Plug	孔塞	1
8	W1-8	Plug	孔塞	1
9	S1-9	Screw (M5-0.8X20)	螺絲	4
10	S1-10	Sewing Machine Supprting Block	機座	1
11	W1-11	Plug	孔塞	1
12	W31-23	Pin	梢	2
13	P1-17	Rivet	鉚釘	4
14	G1-21	Name Plate	銘牌	1
15	W1-15	Plug	孔塞	1
16	W1-16	Screw (M4-0.7X6.5)	螺絲	2
17	W1-17	Cover	底蓋	1
18	W1-31	Oil Seal	油封	1
19	W1-19	Plug	孔塞	1
20	W1-33	Sewing Head Cover (Right)	車頭後蓋	1
21	S1-21	Model Plate	型號銘牌	1
22	P2-41	Sticker	貼紙	1
23	P1-22	Warning Sticker	警告貼紙	1
24	P3-6	Warning Sticker	警告貼紙	1
25	W9-3	Screw (M5-0.8X12)	螺絲	1
26	W9-1	Screw (M5-0.8X8)	螺絲	2
32	S1-32	Sewing Machine Supprting Block	機座	1

2

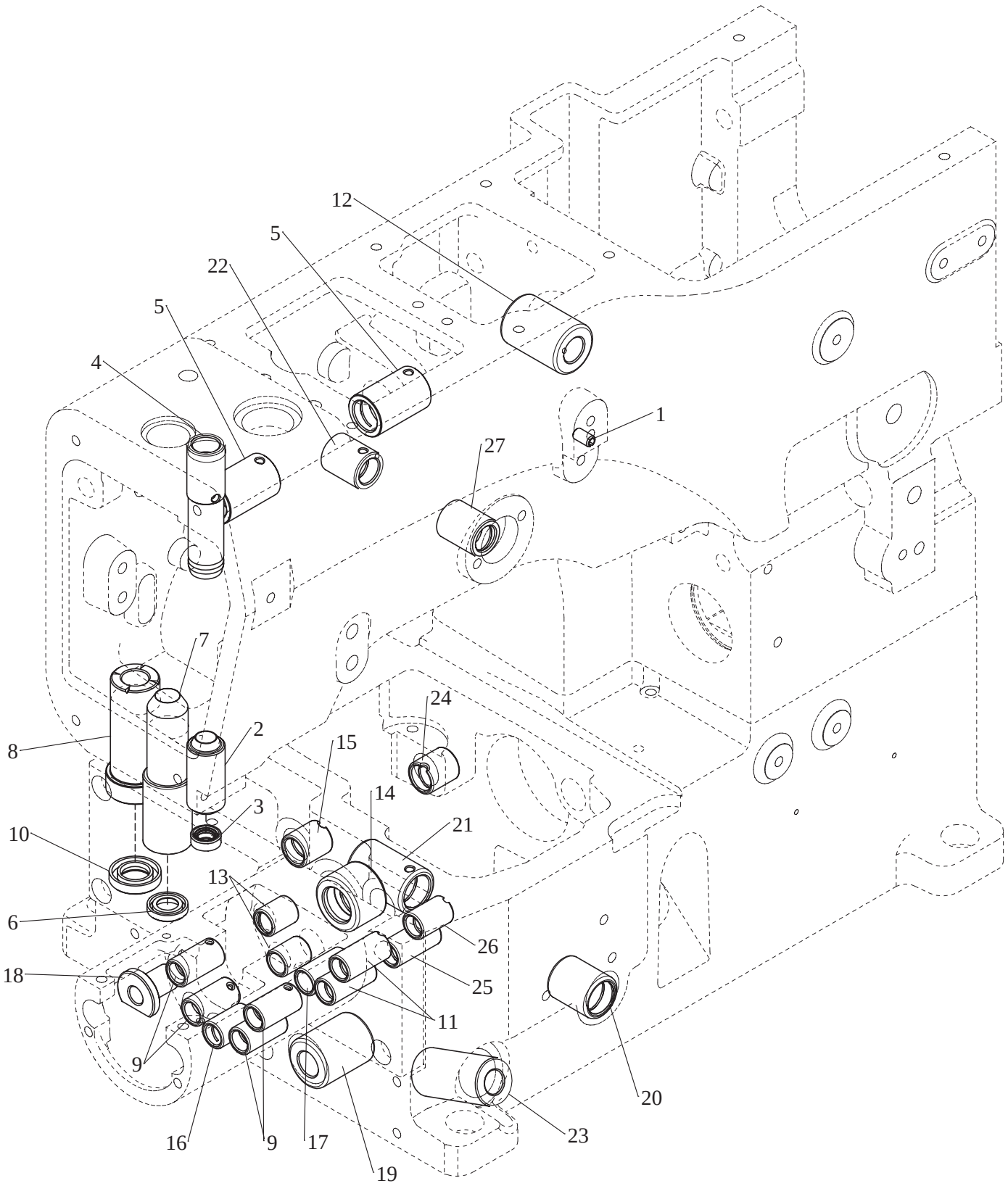

Ref. No.	Parts No.	Description	品　　名	Amt. Req.
1	W2-1	Pin (SPP4*8)	開口銷	1
2	W2-2	Needle Bar Bushing(Lower)	針柱套管(下)	1
3	W2-3	Oil Seal	油封	1
4	W2-4	Needle Bar Bushing(Upper)	針柱套管(上)	1
5	W2-5	Bushing	銅套管	2
6	W2-6	Oil Seal	油封	1
7	W2-7	Bushing	銅套管	1
8	W2-8	Bushing	銅套管	1
9	S2-9	Bushing	銅套管	4
10	W1-31	Oil Seal	油封	1
11	S2-11	Bushing	銅套管	2
12	W2-12	Bushing	銅套管	1
13	S2-13	Bushing	銅套管	2
14	S2-14	Bushing	軸襯套	1
15	S2-15	Bushing	軸襯套	1
16	S2-16	Bushing	軸襯套	1
17	S2-17	Bushing	軸襯套	1
18	S2-18	Bushing	軸襯套	1
19	W2-22	Bushing	軸襯套	1
20	W2-20	Bushing	軸襯套	1
21	W2-21	Bushing	軸襯套	1
22	W2-10	Bushing	軸襯套	1
23	W2-23	Bushing	軸襯套	1
24	S2-24	Bushing	軸襯套	1
25	S2-25	Bushing	軸襯套	1
26	S2-26	Bushing	軸襯套	1
27	W2-11	Bushing	軸襯套	1

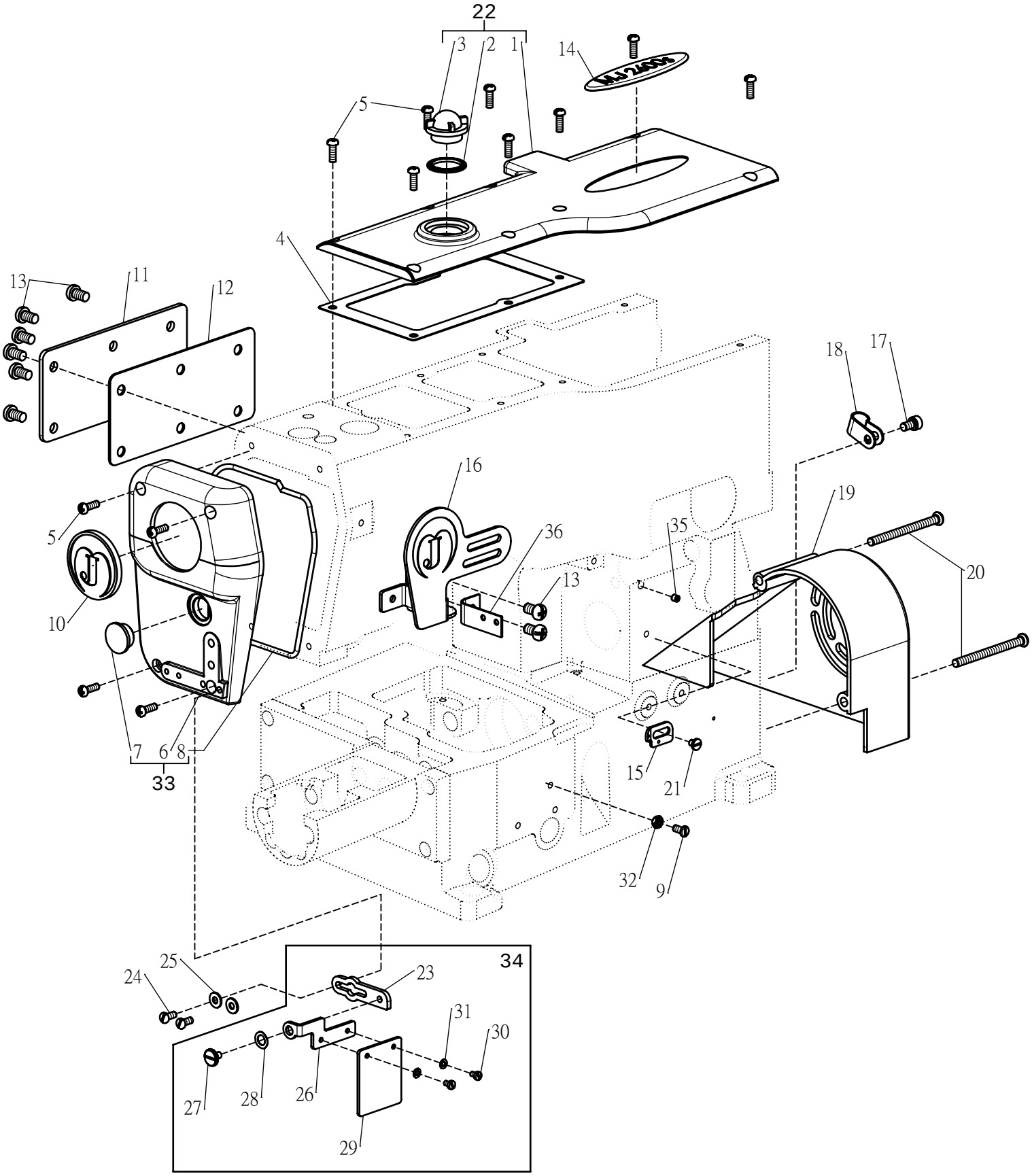
22
3
2
1
14
5
4
13
11
12
18
17
16
19
5
36
35
20
13
10
7
6
8
33
15
21
32
9
34
25
24
23
31
30
27
28
26
29

Ref. No.	Parts No.	Description	品　　名	Amt. Req.
1	W3-1	Sewing Head Cover (Top)	車頭上蓋	1
2	W3-2	O-Ring	O型橡膠環	1
3	W3-3	Oil Sight Window	油鏡	1
4	W3-4	Gasket	止油襯墊	1
5	W3-5	Screw (M4-0.7X12)	螺絲	12
6	W3-6	Sewing Head Cover (Left)	車頭前蓋	1
7	P1-48	Plug	孔塞	1
8	W3-8	O-Ring	防油襯環	1
9	W4-3	Screw (M4-0.7X8)	螺絲	1
10	W3-10	Name Plate	銘牌	1
11	W3-11	Sewing Head Cover (Rear)	車頭後側蓋	1
12	W3-12	Gasket	止油襯墊	1
13	W3-13	Screw (M6-1X10)	螺絲	8
14	S3-14	Name Plate	銘牌	1
15	W3-15	Thread Guide	導線片	1
16	W3-16	Thread Takeup Cover	收線保護蓋	1
17	W21-18	Screw (M5-0.8X8)	螺絲	1
18	W3-18	Cord Clamp (UC-2,3/8")	線套	1
19	W3-19	Pulley Cover	皮帶輪蓋	1
20	W3-20	Screw (M5-0.8X60)	螺絲	2
21	W24-19	Screw (M4-0.7X4)	螺絲	1
22	W3-22	Arm Cover(Top) Assembly	車頭上蓋組	1
23	W3-23	Bracket	護目鏡托架	1
24	W3-24	Screw (M4-0.7X8)	螺絲	2
25	W3-25	Washer	墊片	2
26	W3-26	Bracket	護目鏡托架	1
27	W3-27	Screw	段付螺絲	1
28	W3-28	Washer	波浪華司	1
29	W3-29	Eye Guard	護目鏡	1
30	W3-30	Screw (M3-0.5X4.5)	螺絲	2
31	W3-31	Washer	墊片	2
32	W3-32	Nut	螺帽	1
33	W3-33	Arm Cover(Top) Assembly	車頭前蓋組	1
34	W3-34	Bracket Assembly	護目鏡組	1
35	W3-35	Screw (M4-0.7X4)	螺絲	1
36	W3-36	Bracket	托架	1

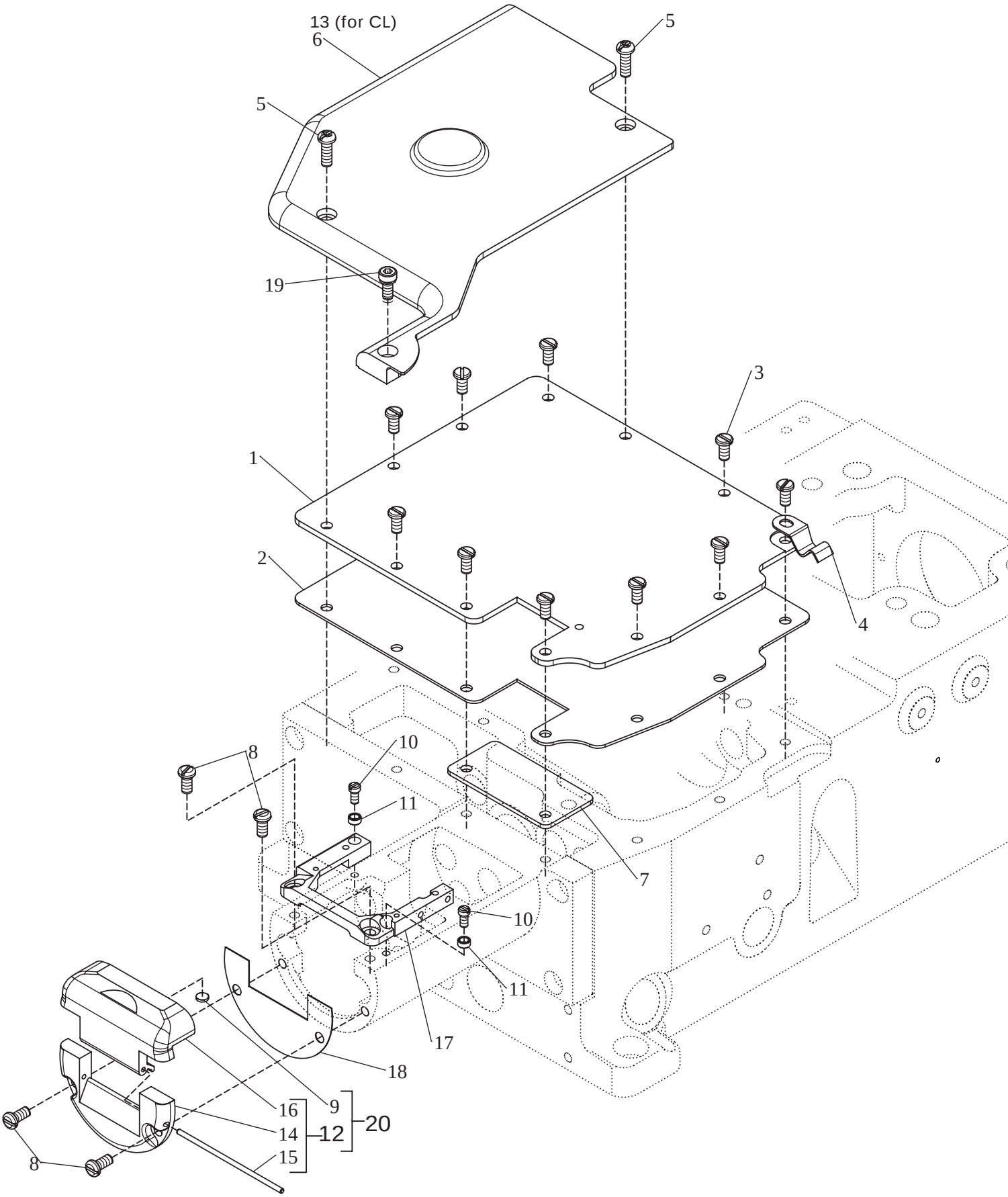
13 (for CL)
6
5
5
19
3
1
2
4
8
10
11
7
10
11
17
18
16
9
14
12
20
15
8

Ref. No.	Parts No.	Description	品　　名	Amt. Req.
1	S4-1	Top Cover	上蓋	1
2	S4-2	Top Cover Gasket	上蓋防油墊片	1
3	W4-3	Screw (M4-0.7X8)	螺絲	10
4	W4-4	Flat Spring	止動片	1
5	W3-5	Screw (M4-0.7X12)	螺絲	2
6	S4-6	Bed Cover	下座上蓋	1
7	S4-7	Top cover (small)	上蓋(小)	1
8	W3-24	Screw (M4-0.7X8)	螺絲	4
9	S4-9	Magnet	磁鐵	1
10	W4-10	Screw (M3-0.5X6)	螺絲	2
11	W4-11	Positioning Bushing	定位襯套	2
12	S4-12	Cover Assembly	蓋板組	1
13	S4-13	Bed Cover (for CL)	下座上蓋 (普通用)	1
14	S4-14	Side Cover	側蓋板(下)	1
15	S4-15	Pin	固定銷	1
16	S4-16	Side Cover	側蓋板(上)	1
17	S4-17	Bracket / Stitch Plate	針板座	1
18	S4-18	Cover Plate Gasket	前蓋板防油墊	1
19	W8-15	Screw (M4-0.7X10)	螺絲	1
20	S4-20	Side Cover Assembly	側蓋板組	1

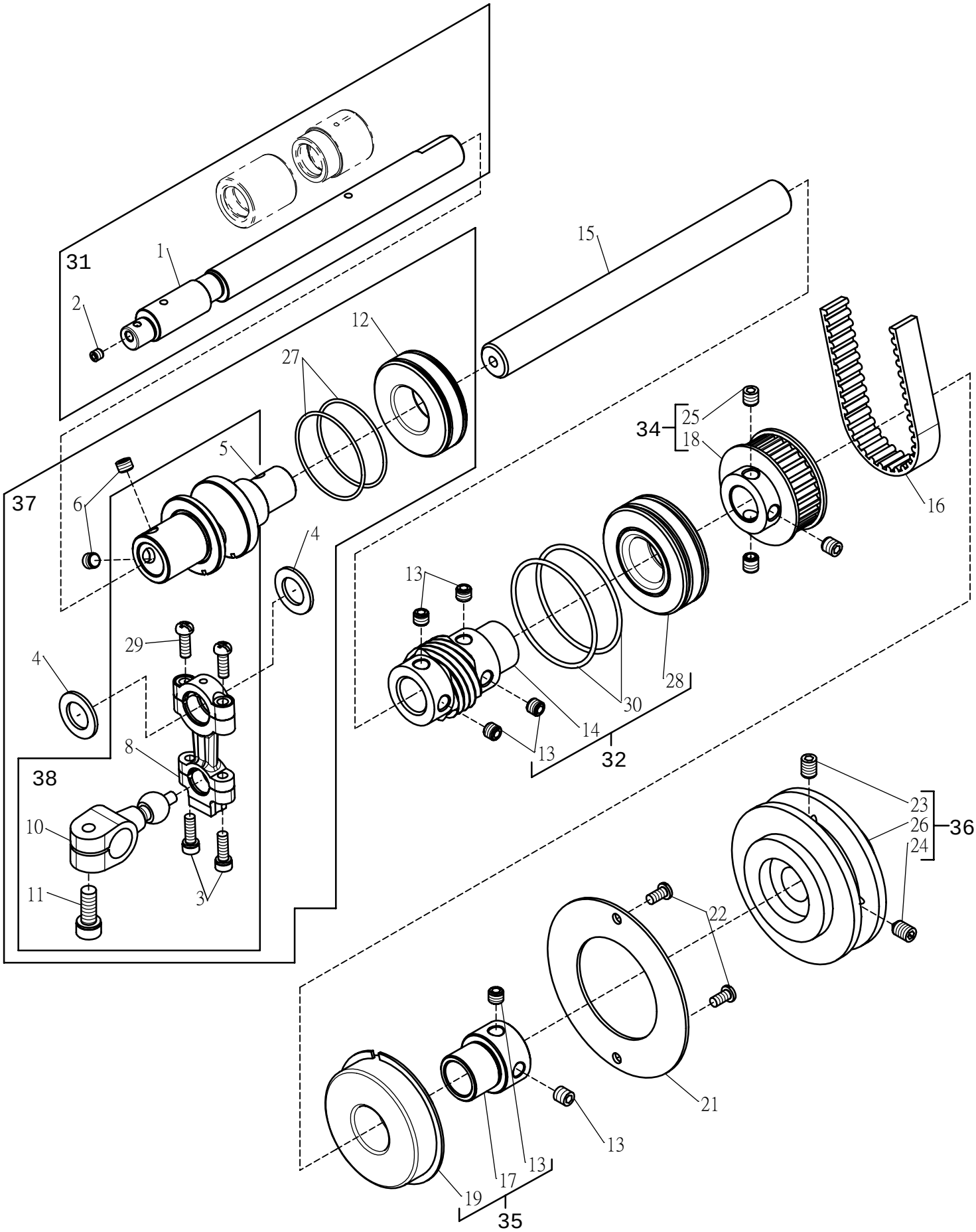
31
1
2
12
27
15
34
25
18
16
37
6
5
4
13
29
4
28
30
14
13
32
8
38
10
11
3
23
26
36
24
22
21
13
17
13
19
35

Ref. No.	Parts No.	Description	品　　名	Amt. Req.
1	S5-1	Crankshaft	偏心軸	1
2	S5-2	Lever Link	連接桿	1
3	W5-3	Screw (M4-0.7X12)	螺絲	2
4	W5-4	Washer	墊片	2
5	W5-5	Main Shaft	主軸	1
6	W5-6	Screw (M6-0.75X4)	螺絲	2
7	S5-7	Crank Assmebly	曲柄組	1
8	W5-8	Connection	連桿	1
9				
10	W5-10	Crank	擺動臂	1
11	W5-11	Screw (M6-0.75X15)	螺絲	1
12	W5-12	Bearing	培林	1
13	W5-13	Screw (M6-0.75X5)	螺絲	6
14	W5-14	Bushing	軸承襯套	1
15	W5-15	Shaft	軸	1
16	W5-16	Timing Belt	時規皮帶	1
17	W5-17	Bushing	軸承襯套	1
18	W5-18	Gear Wheel	齒輪	1
19	W5-19	Bearing	培林	1
20				
21	W5-21	Set Plate	止動板	1
22	W4-3	Screw (M4-0.7X8)	螺絲	2
23	P6-12	Screw (M6-1X8)	螺絲	1
24	W5-24	Screw (M6-1X10)	螺絲	1
25	P13-6	Screw (M6-1X6)	螺絲	3
26	W5-26	Pulley	皮帶輪	1
27	W5-27	O-Ring	0型油環	2
28	W5-28	Bearing	培林	1
29	W3-5	Screw (M4-0.7X12)	螺絲	2
30	W5-30	O-Ring	0型油環	2
31	S5-31	Pin	軸	1
32	W5-32	Bushing Assembly	軸承襯套組	1
33	W5-37	Connection Assembly	連桿組	1
34	W5-34	Bushing Assembly	軸承襯套封組	1
35	W5-35	Bushing Assembly	軸承襯套組	1
36	W5-36	Machine Pulley Assembly	皮帶輪組	1
37	S5-37	Crank	曲柄	1
38	W3-35	Screw (M4-0.7X4)	螺絲	1
39	W9-3	Screw (M5-0.8X12)	螺絲	1
40	W5-38	Connection Assembly	連桿組	1

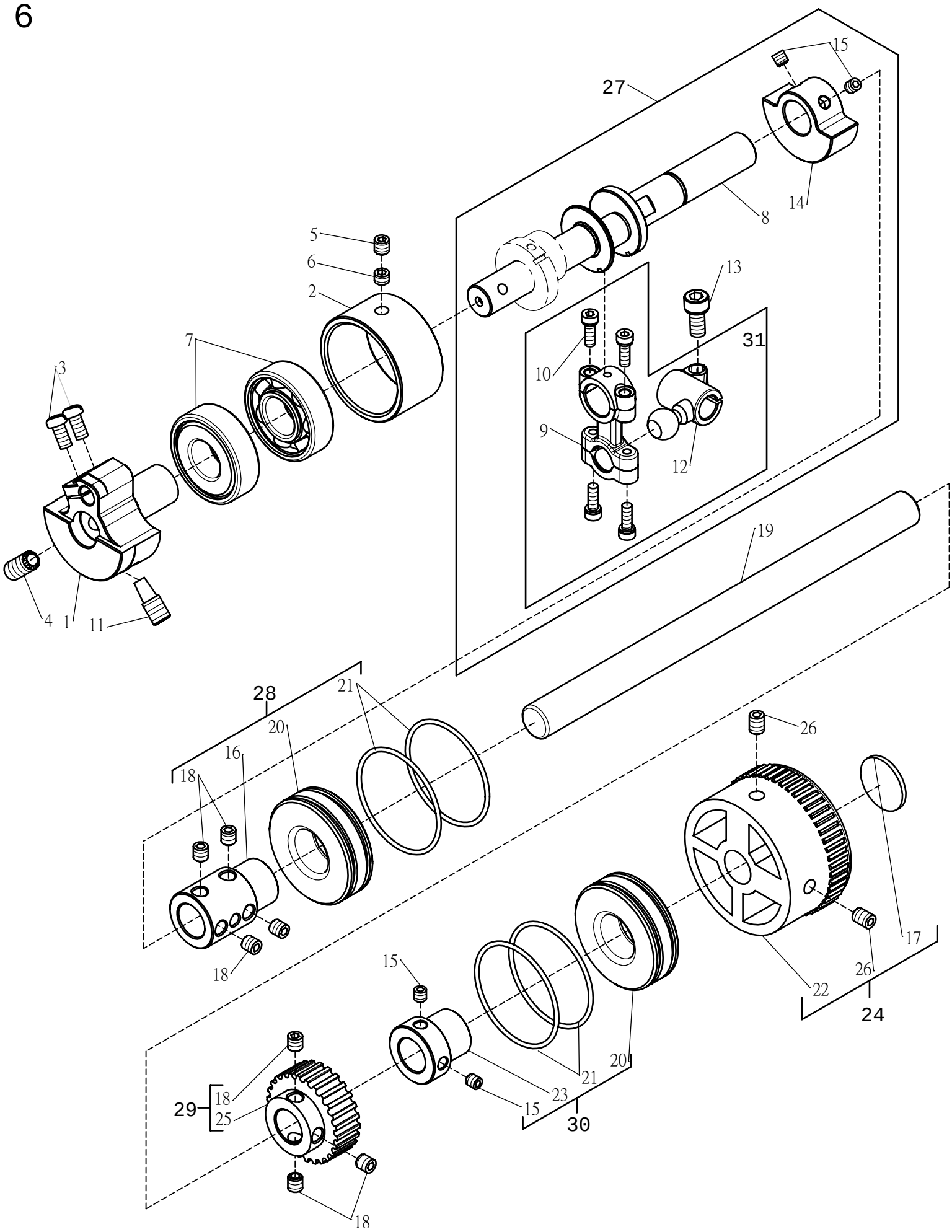
27
15
14
8
5
6
2
13
31
10
7
3
9
12
19
4
1
11
28
21
20
16
18
26
17
22
24
15
23
21
20
29
25
30

Ref. No.	Parts No.	Description	品　　名	Amt. Req.
1	W6-1	Balance Weight	平衡錘	1
2	W6-2	Bushing	軸襯套	1
3	W6-3	Screw (M5-0.8X10)	螺絲	2
4	W6-4	Screw (5/16-24X16)	螺絲	1
5	W1-29	Screw (M6-1X6)	螺絲	1
6	W6-6	Screw (M6-1X6)	螺絲	1
7	W6-7	Bearing	培林	2
8	W6-8	Crankshaft	偏心軸	1
9	W6-9	Connection	連桿	1
10	W6-10	Screw (M4-0.7X6)	螺絲	4
11	W6-11	Screw (5/16-24X19)	螺絲	1
12	W6-12	Crank	曲柄	1
13	W6-13	Screw (M6-0.75X12)	螺絲	1
14	W6-14	Balance Weight	平衡錘	1
15	W6-15	Screw (M5-0.8X5)	螺絲	4
16	W6-16	Crankshaft Coupling	偏心軸襯套	1
17	W6-17	Handwheel Mark	手推輪商標銘牌	1
18	P13-6	Screw (M6-1X6)	螺絲	7
19	W6-19	Shaft	軸	1
20	W5-28	Bearing	培林	2
21	W5-30	O-Ring	0型油環	4
22	W6-22	Handwheel	手輪	1
23	W6-23	Bushing	軸襯套	1
24	W6-24	Handwheel Assembly	手輪組	1
25	W6-25	Gear Wheel	齒輪	1
26	P6-12	Screw (M6-1X8)	螺絲	2
27	W6-27	Crankshaft Assembly	偏心軸組	1
28	W6-28	Bushing Assembly	軸承襯套組	1
29	W6-29	Gear (Upper) Assembly	時規齒輪組	1
30	W6-30	Bushing Assembly	軸承襯套組	1
31	W6-31	Connection Assembly	連桿組	1

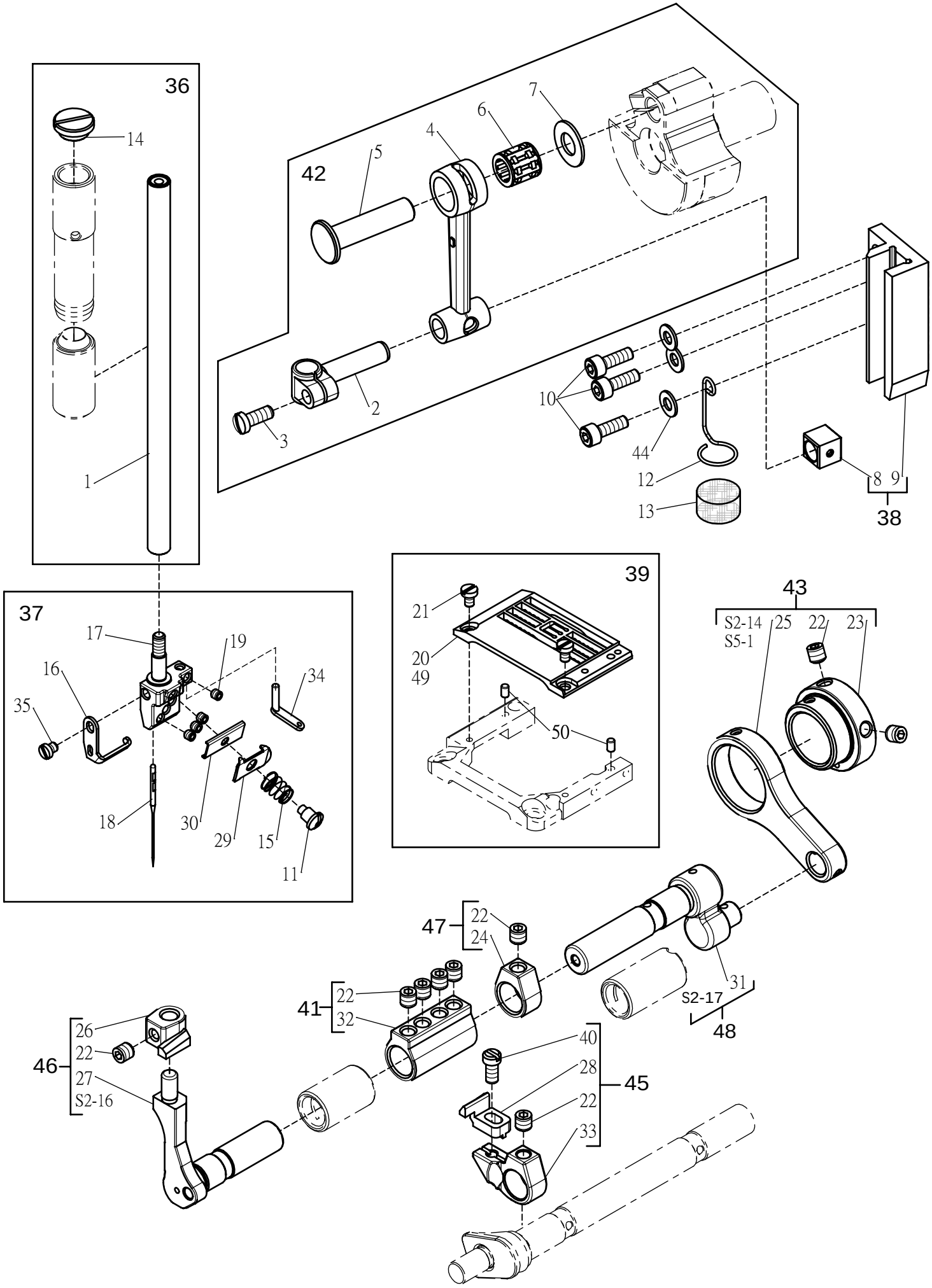
36
14
1
42
5
4
6
7
2
3
10
44
12
13
8 9
38
37
17
19
16
34
35
18
30
29
15
11
39
21
20
49
50
43
S2-14
S5-1
25
22
23
47
22
24
31
S2-17
48
41
22
32
46
26
22
27
S2-16
40
28
22
33
45

Ref. No.	Parts No.	Description	品 名	Amt. Req.
1	W7-1	Needle Bar	針棒	1
2	W7-2	Needle Bar Clamp	針棒連桿	1
3	W7-3	Screw (11/64-40X10.5)	螺絲	1
4	W7-4	Link	連桿	1
5	W7-5	Pin	插銷	1
6	W7-6	Needle Bearing	滾針軸承	1
7	W7-7	Washer	墊片	1
8	W7-8	Guide Block	導引滑塊	1
9	W7-9	Guide	導引座	1
10	W7-10	Screw (M4-0.7X12)	螺絲	3
11	W7-11	Screw (M3-0.5X2.3)	螺絲	1
12	W7-12	Latch	扣環	1
13	W7-13	Felt	羊毛氈	1
14	W7-14	Screw (M10-1X3.2)	螺絲	1
15	W7-15	Spring	彈簧	1
16	W7-16	Thread Guide	導線片	1
17	W7-17	Needle Holder	針鐂	1
18	W7-18	Needle	針	3
19	W7-19	Screw (1/8-44X2.8)	螺絲	4
20	S7-20	Needle Plate	針板	1
21	W3-30	Screw (M3-0.5X4.5)	螺絲	2
22	W3-35	Screw (M4-0.7X4)	螺絲	9
23	S7-23	Eccentric	偏心襯套	1
24	S7-24	Collar	定位套環	1
25	S7-25	Lever	曲柄	1
26	S7-26	Needle Guard (Rear)	針受(後)	1
27	S7-27	Needle Guard Holder (Rear)	針受台(後)	1
28	S7-28	Needle Guard (Front)	針受(前)	1
29	W7-29	Tension Disc	夾線片	1
30	W7-30	Thread Guide	導線片	1
31	S7-31	Lever	曲柄	1
32	S7-32	Collar	定位套環	1
33	S7-33	Needle Guard Holder (Front)	針受台(前)	1
34	W7-34	Thread Guide	撥線桿	1
35	W7-35	Screw (1/8-44X4)	螺絲	1
36	W7-36	Needle Bar Assembly	針棒組	1
37	W7-37	Needle Holder Assembly	針鐂組	1
38	W7-38	Guide Assembly	導引座組	1
39	S7-39	Needle Plate Assembly	針板座組	1
40	W4-10	Screw (M3-0.5X6)	螺絲	1

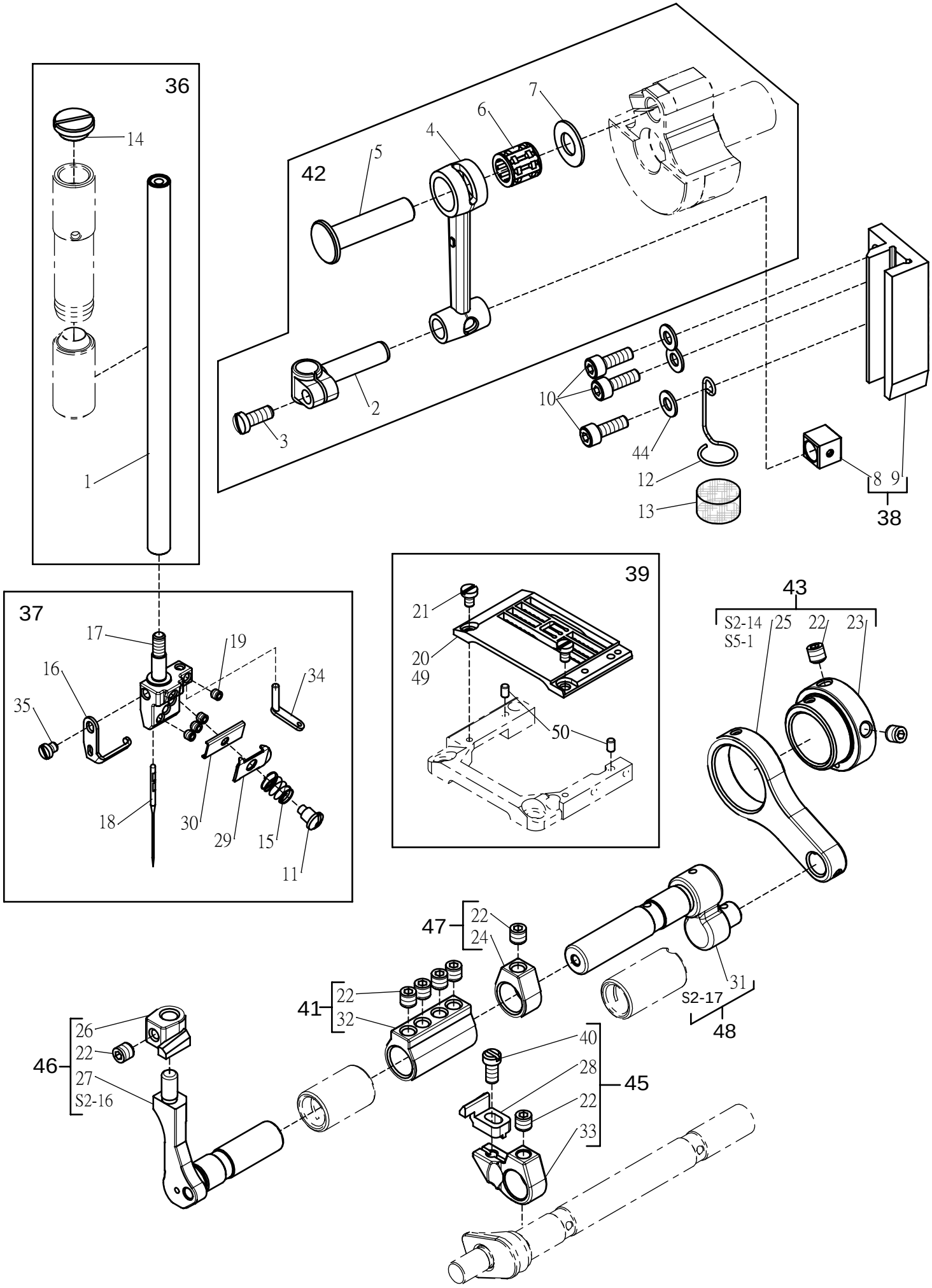
36
14
1
42
5
4
6
7
2
3
10
44
12
13
8 9
38
37
17
19
16
34
35
18
30
29
15
11
39
21
20
49
50
43
S2-14
S5-1
25
22
23
47
22
24
31
S2-17
48
41
22
32
46
26
22
27
S2-16
40
28
22
33
45

Ref. No.	Parts No.	Description	品　　名	Amt. Req.
41	S7-41	Collar Assembly	定位套環組	1
42	W7-42	Link Assemly	連桿組	1
43	S7-43	Eccentric Assembly	偏心襯套組	1
44	W7-44	Washer	墊片	3
45	S7-45	Needle Guard (Front) Assembly	針受台(前)組	1
46	S7-46	Needle Guard (Rear) Assembly	針受台(後)組	1
47	S7-47	Collar Assembly	定位套環組	1
48	S7-48	Lever Assembly	曲柄組	1
49	S7-49	Needle Plate(For light-weighted material)	針板(薄布料)	1
50	W33-33	Pin	插銷	2

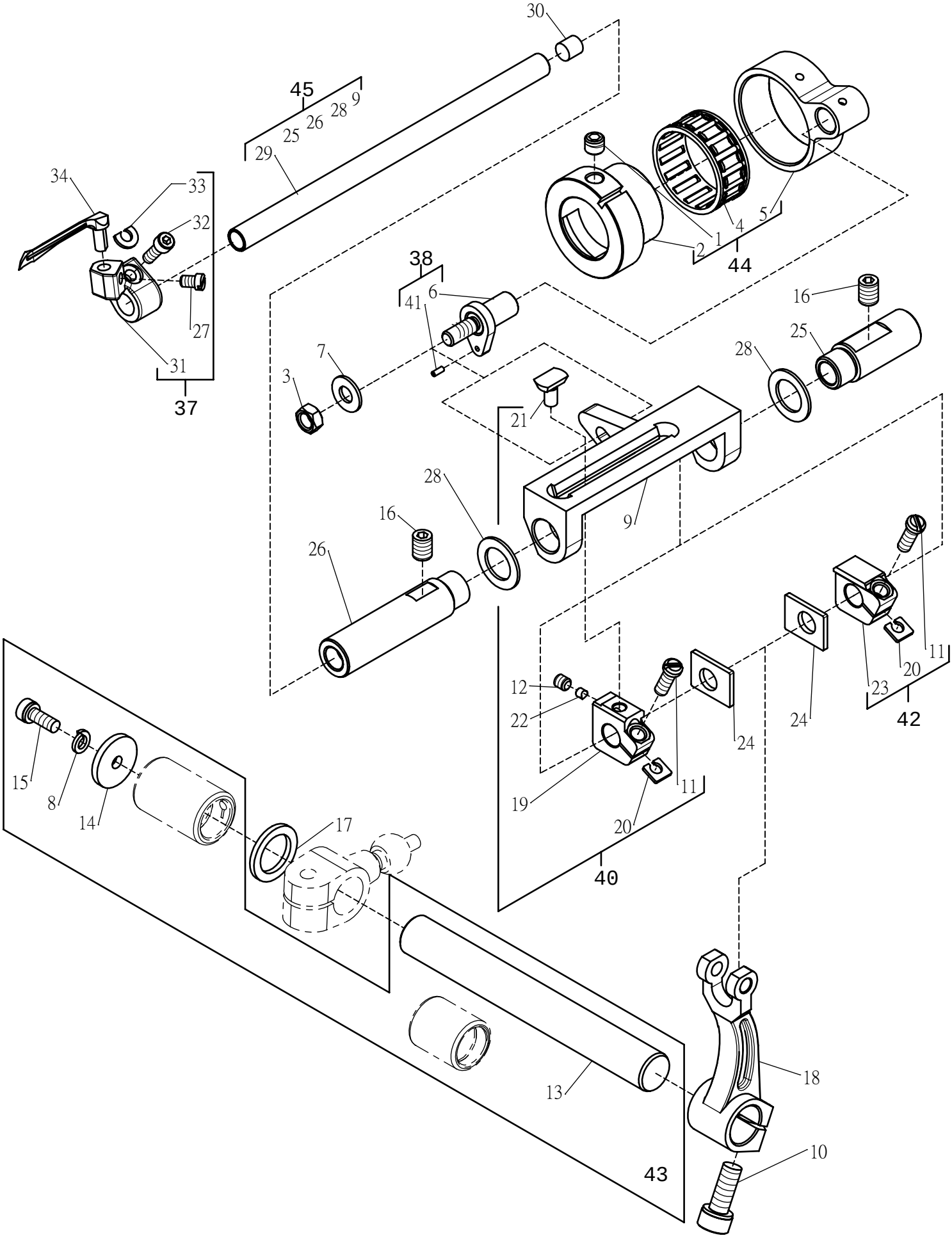
30
45
9
28
26
25
29
34
33
32
27
31
37
38
6
41
7
3
16
25
28
21
9
28
16
26
12
22
19
11
20
24
24
23
20
11
42
40
15
8
14
17
13
18
10
43
44
1
2
4
5

Ref. No.	Parts No.	Description	品　　名	Amt. Req.
1	W5-13	Screw (M6-0.75X5)	螺絲	1
2	W8-2	Eccentric	偏心軸	1
3	W8-3	Nut	螺帽	1
4	W8-4	Needle Bearing	滾針軸承	1
5	W8-5	Rod	連桿	1
6	W8-6	Pin	螺樁	1
7	P8-8	Washer	墊片	1
8	W8-8	Spring Washer	彈簧墊片	1
9	W8-9	Guide / Looper Shaft	勾針基底	1
10	W5-11	Screw (M6-0.75X15)	內六角窩頭螺絲	1
11	S8-11	Screw (M4-0.7X12)	螺絲	2
12	S8-12	Screw (M4-0.7X4)	螺絲	1
13	W8-13	Looper Shaft	下勾針主軸	1
14	W8-14	Washer	墊片	1
15	W8-15	Screw (M4-0.7X10)	螺絲	1
16	S8-16	Screw (M6-1X8)	螺絲	2
17	W8-17	Washer	墊片	1
18	W8-18	Lever	擺動臂	1
19	W8-19	Holder	左撥動塊	1
20	W8-20	Washer	墊片	2
21	W8-21	Slider	導引滑塊	1
22	W8-22	Pin	定位梢	1
23	W8-23	Holder	右撥動塊	1
24	W8-24	Washer	墊片	2
25	S8-25	Shaft	軸	1
26	S8-26	Looper Bar Bushing	下勾針驅動軸襯套	1
27	S8-27	Screw (M3.5-0.6X4)	螺絲	1
28	S8-28	Washer	墊片	2
29	W8-29	Shaft	軸	1
30	W8-30	Plug	油塞	1
31	S8-31	Looper Holder	勾針座	1
32	W8-32	Screw (M3.5-0.6X10)	螺絲	1
33	W8-33	Washer	墊片	1
34	W8-34	Looper	勾針	1
35				
36				
37	S8-37	Looper Holder Assembly	勾針座組	1
38	W8-38	Pin Assembly	螺樁組	1
39				
40	S8-40	Holder Assembly	左撥動塊組	1

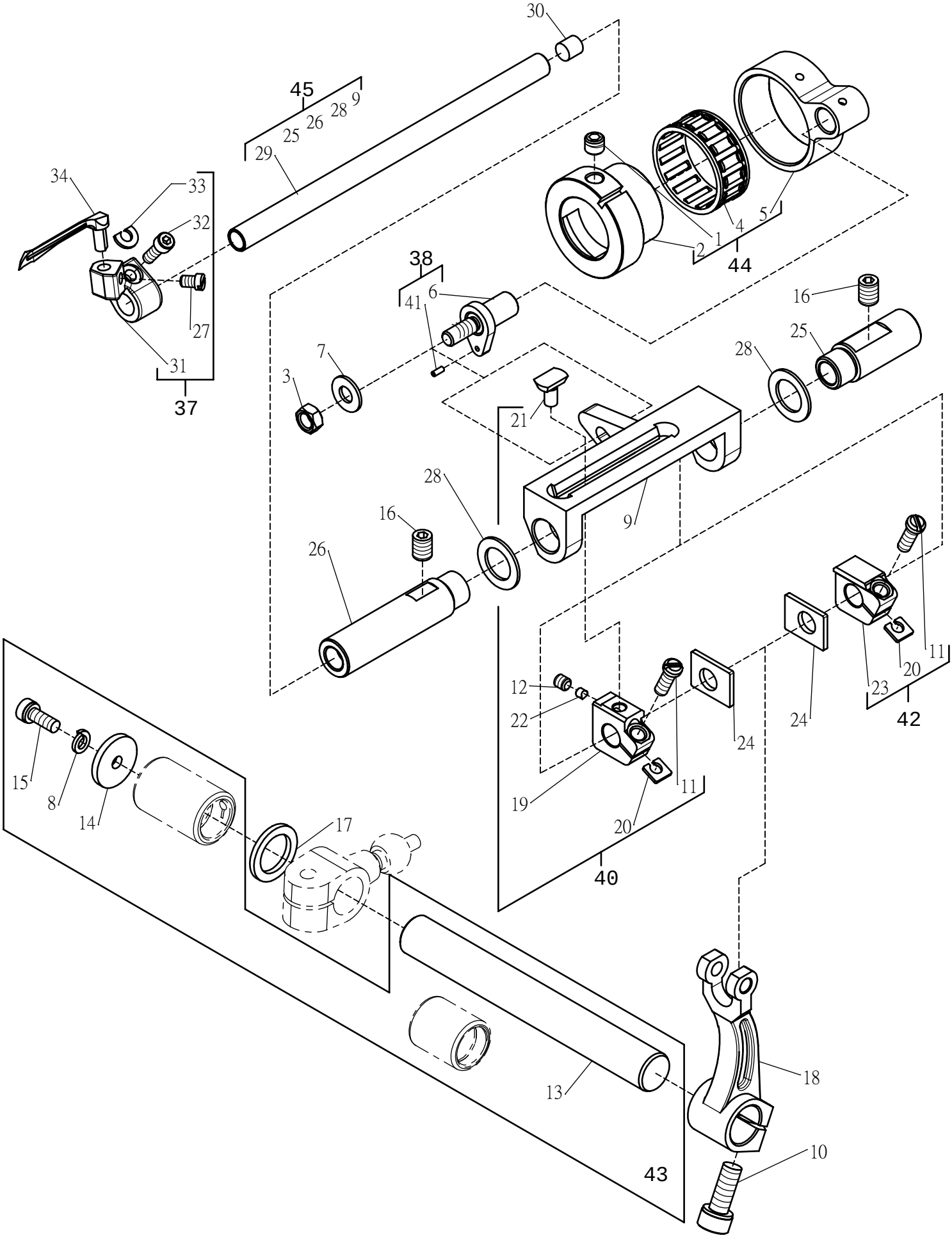
30
45
9
28
26
25
29
34
33
32
27
31
37
38
6
41
7
3
16
25
28
21
9
28
16
26
12
22
19
11
20
24
24
23
20
11
42
40
15
8
14
17
13
18
10
43
44
1
2
4
5

Ref. No.	Parts No.	Description	品　　名	Amt. Req.
41	W8-41	Pin	插銷	1
42	S8-42	Holder Assembly	右撥動塊組	1
43	W8-43	Looper Shaft Assembly	下勾針主軸組	1
44	W8-44	Eccentric Assembly	偏心軸組	1
45	S8-45	Guide / Looper Shaft Assembly	勾針基底組	1

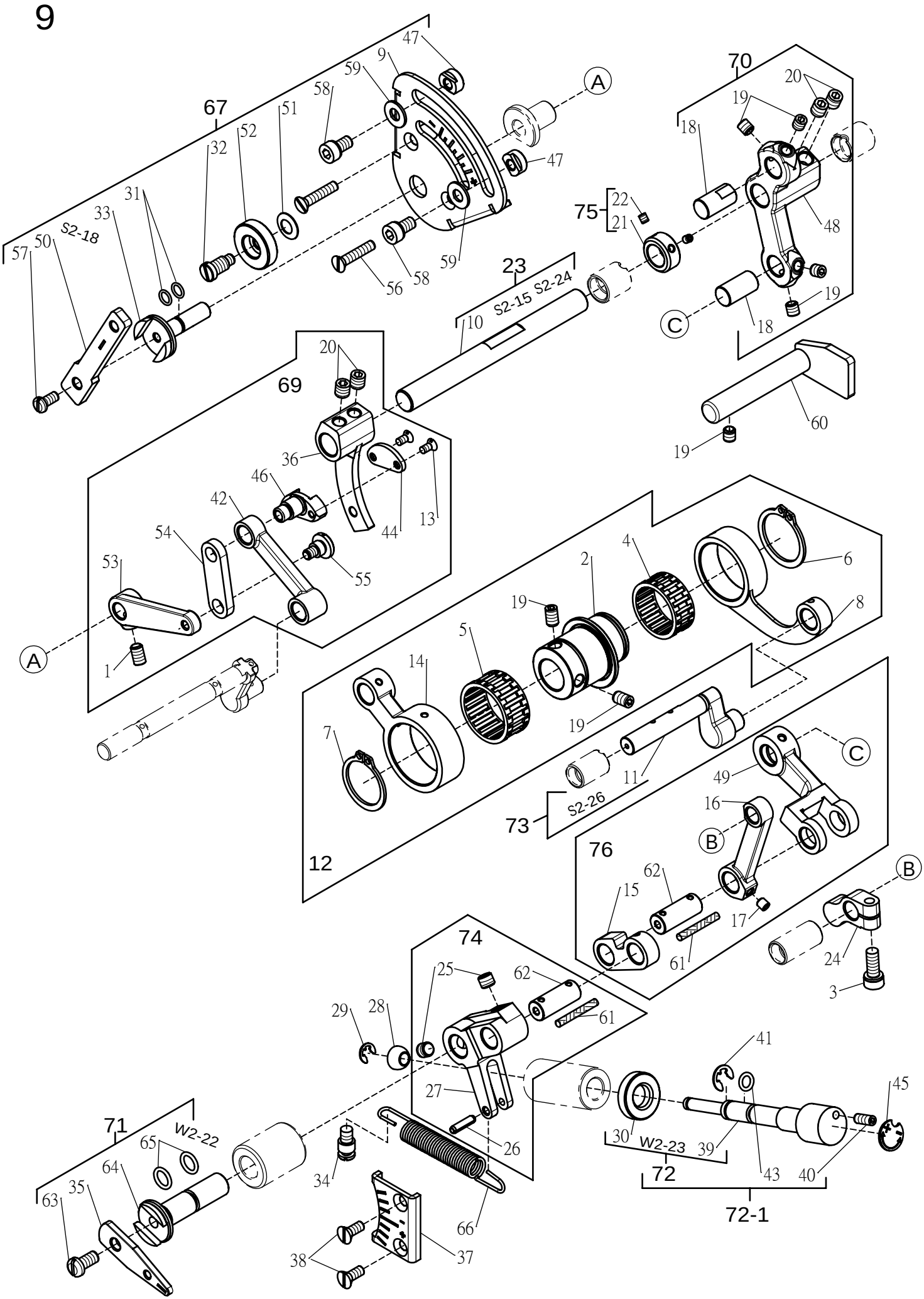
67
S2-18
57
50
33
31
32
52
51
58
59
9
47
A
47
59
56
58
70
20
19
18
48
75
22
21
23
S2-15 S2-24
10
C
18
19
60
19
69
20
36
46
42
54
53
44
13
55
A
1
12
2
4
6
8
19
5
14
7
19
11
73
S2-26
76
C
49
16
B
62
15
17
61
B
24
3
74
25
62
61
29
28
27
26
41
45
30
W2-23
39
43
40
72
72-1
71
W2-22
65
64
35
63
34
38
37
66

Ref. No.	Parts No.	Description	品　　名	Amt. Req.
1	W9-1	Screw (M5-0.8X8)	螺絲	1
2	S9-2	Eccentric	偏心軸	1
3	W9-3	Screw (M5-0.8X12)	螺絲	1
4	W9-4	Needle Bearing	滾針軸承	1
5	W9-5	Needle Bearing	滾針軸承	1
6	W9-6	Ring	C型扣環	1
7	W9-7	Ring	C型扣環	1
8	S9-8	Link Lever	連桿	1
9	S9-9	Indication Plate	刻度蓋	1
10	S9-10	Shaft	軸	1
11	S9-11	Rod	連桿	1
12	S9-12	Rod Assmebly	連桿組	1
13	W9-13	Screw (M3-0.5X6)	螺絲	2
14	S9-14	Link Lever	連桿	1
15	W9-15	Link Lever	連桿	1
16	S9-16	Link Lever	連桿	1
17	W3-35	Screw (M4-0.7X4)	螺絲	1
18	S9-18	Pin	軸	2
19	W6-15	Screw (M5-0.8X5)	螺絲	7
20	P13-6	Screw (M6-1X6)	螺絲	4
21	W13-16	Collar	定位套環	1
22	W13-17	Screw (1/8-44X3.5)	螺絲	2
23	S9-23	Shaft Assembly	軸組	1
24	S9-24	Crank	曲柄	1
25	W5-13	Screw (M6-0.75X5)	螺絲	2
26	W9-43	Pin	插銷	1
27	W9-27	Link	曲柄	1
28	W9-28	Liner	襯套	1
29	W9-40	Ring	E型扣環	1
30	W9-30	Nut	螺帽	1
31	S9-31	O-Ring	油環	2
32	S9-32	Screw (M5-0.8X4)	螺絲	1
33	S9-33	Shaft	軸	1
34	W9-32	Screw	螺樁	1
35	S9-35	Lever	調節桿	1
36	S9-36	Roller Beaning	傳動軸	1
37	S9-37	Indication Plate	刻度蓋	1
38	W9-38	Screw (M4-0.7X10)	螺絲	2
39	S9-39	Adjusting Screw	微調螺桿	1
40	W9-23	Screw (M4-0.7X10)	螺絲	1

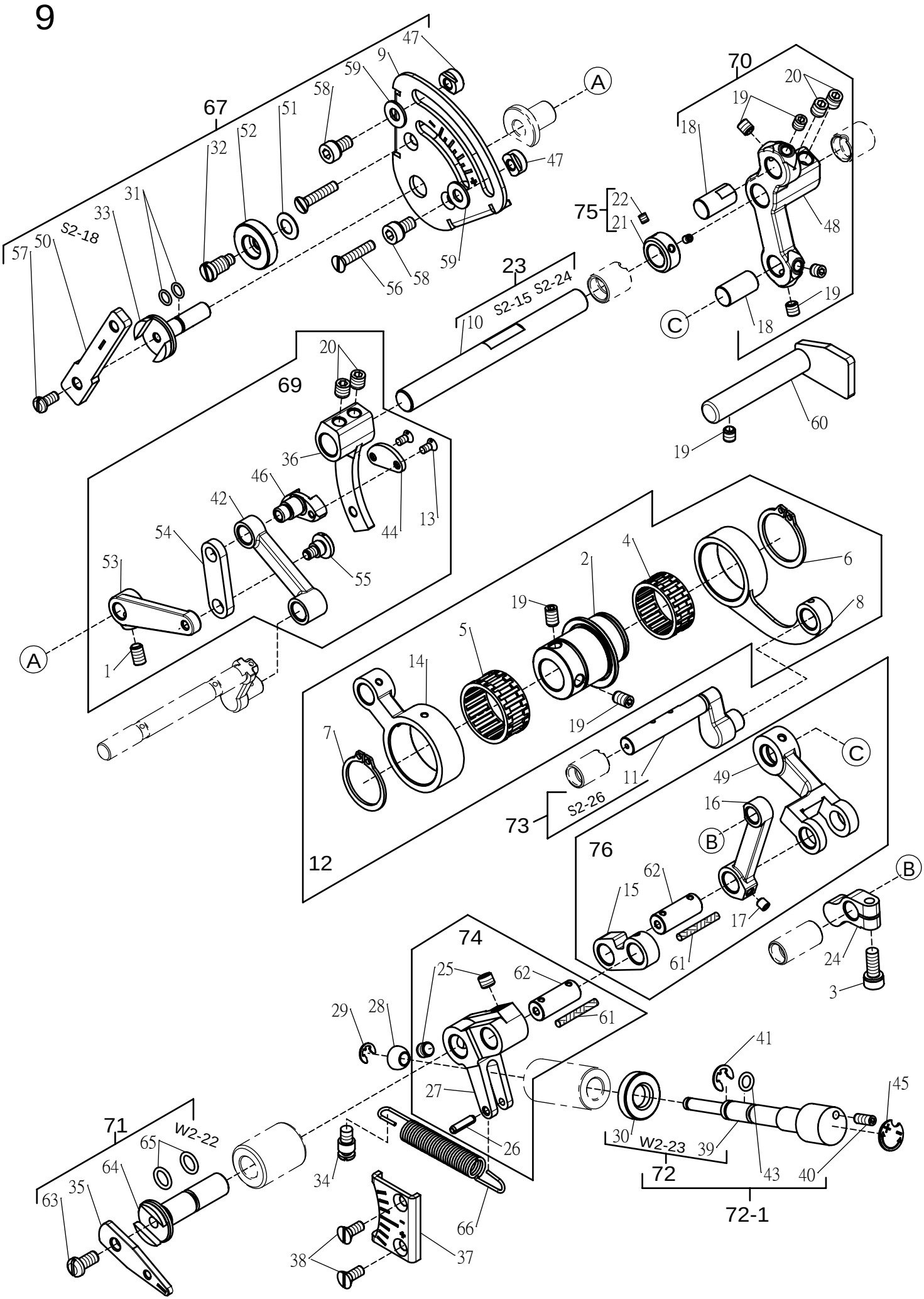
67
S2-18
57
50
33
31
32
52
51
58
59
9
47
A
47
59
56
58
70
20
19
18
48
75
22
21
23
S2-15 S2-24
10
C
18
19
60
19
69
20
36
46
42
54
53
44
13
55
A
1
12
2
4
6
8
19
5
14
7
19
11
73
S2-26
76
C
49
16
B
62
15
17
61
B
24
3
74
25
62
61
29
28
27
26
41
45
30
W2-23
39
43
40
72
72-1
71
W2-22
65
64
35
63
34
38
37
66

Ref. No.	Parts No.	Description	品　　名	Amt. Req.
41	W9-41	Ring	E型扣環	1
42	S9-42	Link Lever	連桿	1
43	W9-22	O-Ring	油環	1
44	S9-44	Stop Unit	差動調整滑塊蓋銷	1
45	W9-45	Sticker	貼紙	1
46	S9-46	Differential Feed Adjusting Block	差動調整滑塊	1
47	S9-47	Differential Feed Lever Stop	差動臂止塊	2
48	S9-48	Link Lever	連桿	1
49	S9-49	Feed Connecting Rod	送料具連桿	1
50	S9-50	Lever	調節桿	1
51	S9-51	Conical Spning Washer	錐形彈簧墊片	1
52	S9-52	Adjusting Nut	調整螺帽	1
53	S9-53	Differential Feed Link Lever	差動連動臂	1
54	P10-26	Differential Feed Adjusting Link	差動送料具調節桿	1
55	S9-55	Screw (11/64-40X5.2)	螺絲	1
56	S9-56	Screw (M4-0.7X20)	螺絲	2
57	W3-24	Screw (M4-0.7X8)	螺絲	1
58	W21-18	Screw (M5-0.8X8)	螺絲	2
59	P8-8	Washer	墊片	2
60	W9-29	Guide	軸	1
61	W9-11	Oil Felt	棉繩	2
62	W9-18	Pin	軸	2
63	W6-3	Screw (M5-0.8X10)	螺絲	1
64	W9-33	Shaft	軸	1
65	W9-34	O-Ring	油環	2
66	W9-31	Spring	彈簧	1
67	S9-67	Adjusting Screw Assmebly	調節軸組	1
68				
69	S9-69	Roller Beaning Assmebly	傳動軸組	1
70	S9-70	Link Lever Assmebly	連桿組	1
71	S9-71	Lever Assembly	調節桿組	1
72	S9-72	Adjusting Screw Assmebly	調節軸組	1
72-1	S9-72-1	Adjusting Screw Assmebly	調節軸組	1
73	S9-73	Link Lever Assmebly	連桿組	1
74	W9-42	Link Assembly	曲柄組	1
75	W13-29	Collar Assembly	定位套環組	1
76	S9-76	Link Lever Assmebly	連桿組	1

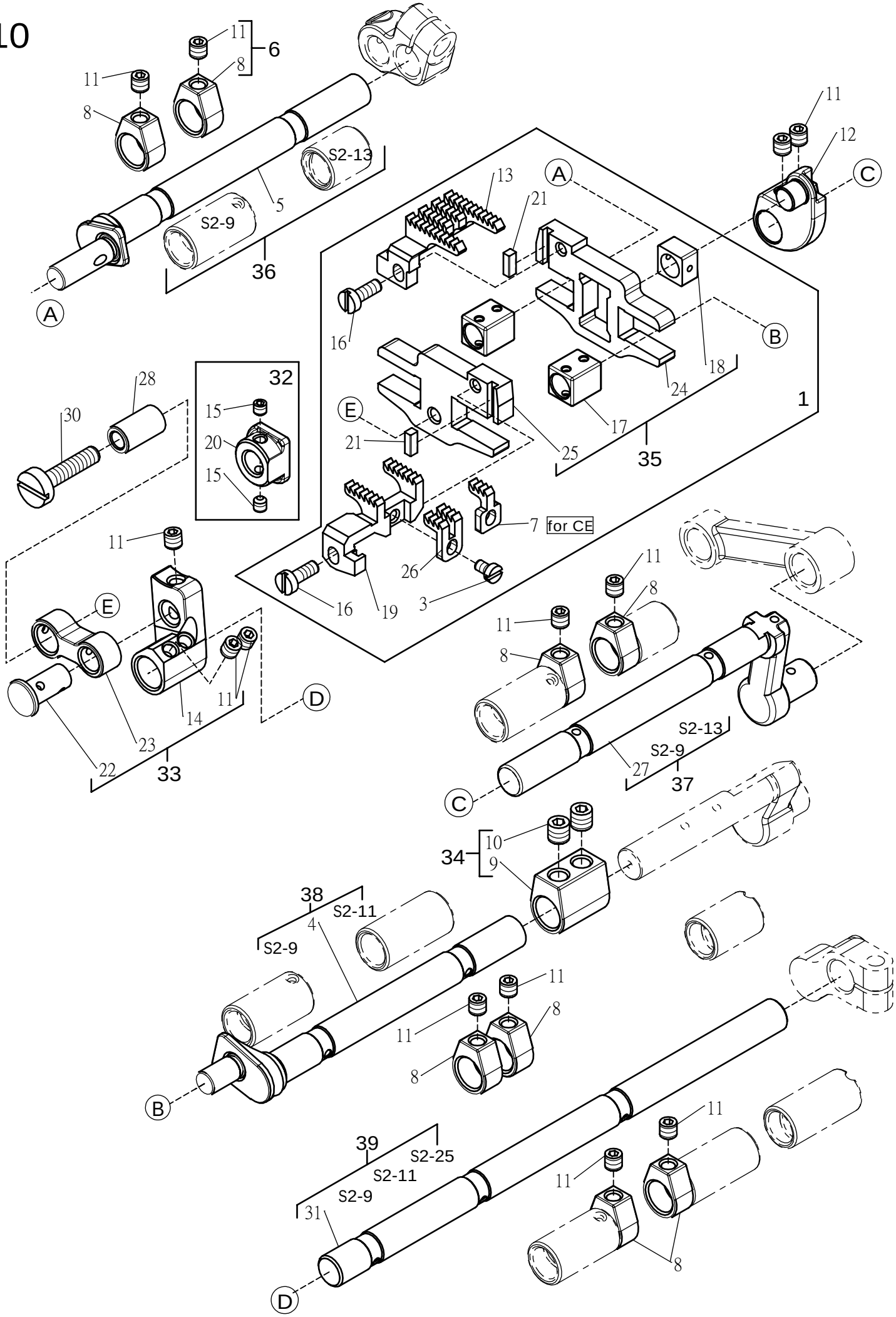
6
11
8
S2-13
S2-9
5
36
A
13
21
C
12
B
16
18
24
1
E
17
25
35
32
15
20
28
30
7
for CE
26
19
3
D
14
23
22
33
27
37
34
10
9
38
S2-11
4
39
S2-25
31

Ref. No.	Parts No.	Description	品　　名	Amt. Req.
1	S10-1	Feed Dog Bar Assembly	送料具固定座組	1
2				
3	W10-3	Screw (M2.5-0.45X4)	螺絲	1
4	S10-4	Crankshaft	軸	1
5	S10-5	Crankshaft	軸	1
6	S7-47	Collar Assembly	定位套環組	8
7	S10-7	Differential Feed Dog (Middle) (for CE)	差動齒(中間小齒)(立骨)	1
8	S7-24	Collar	定位套環	8
9	S10-9	Collar	定位套環	1
10	W6-15	Screw (M5-0.8X5)	螺絲	2
11	W3-35	Screw (M4-0.7X4)	螺絲	13
12	S10-12	Crank	曲柄	1
13	S10-13	Main Feed Dog	主送布齒	1
14	S10-14	Crank	曲柄	1
15	W16-11	Screw (M3-0.5X3)	螺絲	2
16	S10-16	Screw (M3-0.5X8)	螺絲	2
17	S10-17	Block	滑塊	2
18	S10-18	Block	滑塊	1
19	S10-19	Differential Feed Dog	差動送布齒	1
20	S10-20	Guide	止動塊	1
21	S10-21	Pin	銷	2
22	S10-22	Pin	插銷	1
23	S10-23	Lever Link	連接桿	1
24	S10-24	Main Feed Bar	主送布齒台	1
25	S10-25	Differential Feed Bar	差動送布齒台	1
26	S10-26	Differential Feed Dog (Middle)	差動齒(中間小齒)	1
27	S10-27	Rod	連桿	1
28	S10-28	Pin	軸	1
29				
30	S10-30	Screw (M4-0.7X18)	螺絲	1
31	S10-31	Crankshaft	送布齒主軸	1
32	S10-32	Guide Assembly	止動塊組	1
33	S10-33	Crank Assembly	曲柄組	1
34	S10-34	Collar Assembly	定位套環組	1
35	S10-35	Feed Bar Assembly	送布齒台組	1
36	S10-36	Crankshaft Assembly	軸組	1
37	S10-37	Rod Assembly	連桿組	1
38	S10-38	Crankshaft Assembly	軸組	1
39	S10-39	Crankshaft Assembly	送布齒主軸組	1

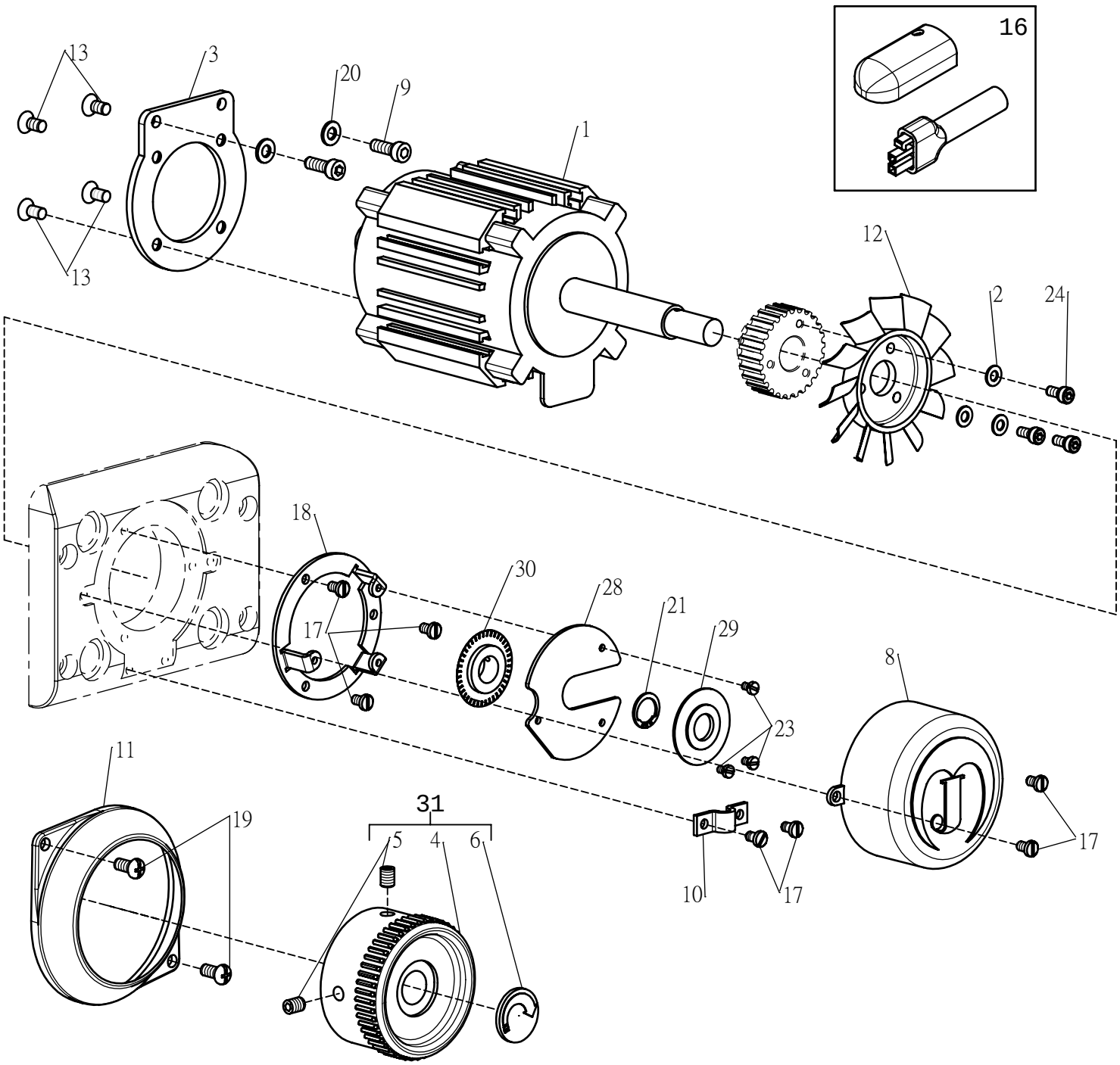
16
13
3
20
9
1
13
12
2
24
18
30
28
21
29
17
8
23
11
19
31
5
4
6
10
17
17

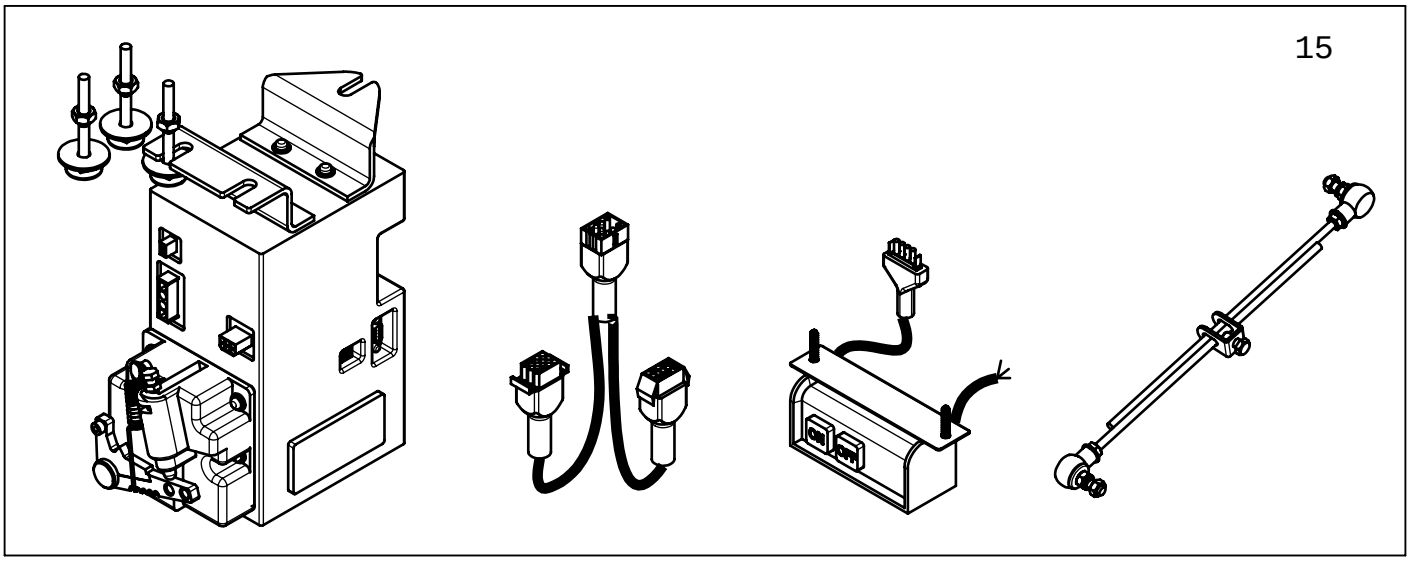
15

Ref. No.	Parts No.	Description	品　　名	Amt. Req.
1	W11-1	Direct-Drive Mini-Servo Motor	微型伺服馬達	1
2	W7-44	Washer	墊片	3
3	W11-3A	Guide	固定板	1
4	W6-22	Handwheel	手輪	1
5	P6-12		螺絲	2
6	W6-17	Handwheel Mark	手推輪商標銘牌	1
8	W11-8A	Cover	護蓋	1
9	P6-46	Screw (M5-0.8X14)	螺絲	2
10	W11-10	Cord Clamp	線套	1
11	W11-11A	Cover	護蓋	1
12	W11-12A	Ventilator	風扇	1
13	W11-13	Screw (M5-0.8X10)	螺絲	4
15	W11-15	Control Box	控制箱	1
16	G1-63	Lamp	燈	1
17	W1-16	Screw (M4-0.7X6)	螺絲	7
18	W11-18	Guide	固定基座	1
19	W11-19	Screw (M5-0.8X10)	螺絲	2
20	P8-8	Washer	墊片	2
21	W11-21	Retaining Ring (STW-12)	扣環	1
23	W3-30	Screw (M3-0.5X5)	螺絲	3
24	P13-2	Screw (M4-0.7X8)	螺絲	3
28	W11-28	IC Guide	IC板	1
29	W11-29	Plate	感光板	1
30	W11-30	Plate	感光板	1
31	W6-24	Handwheel Assembly	手輪組	1

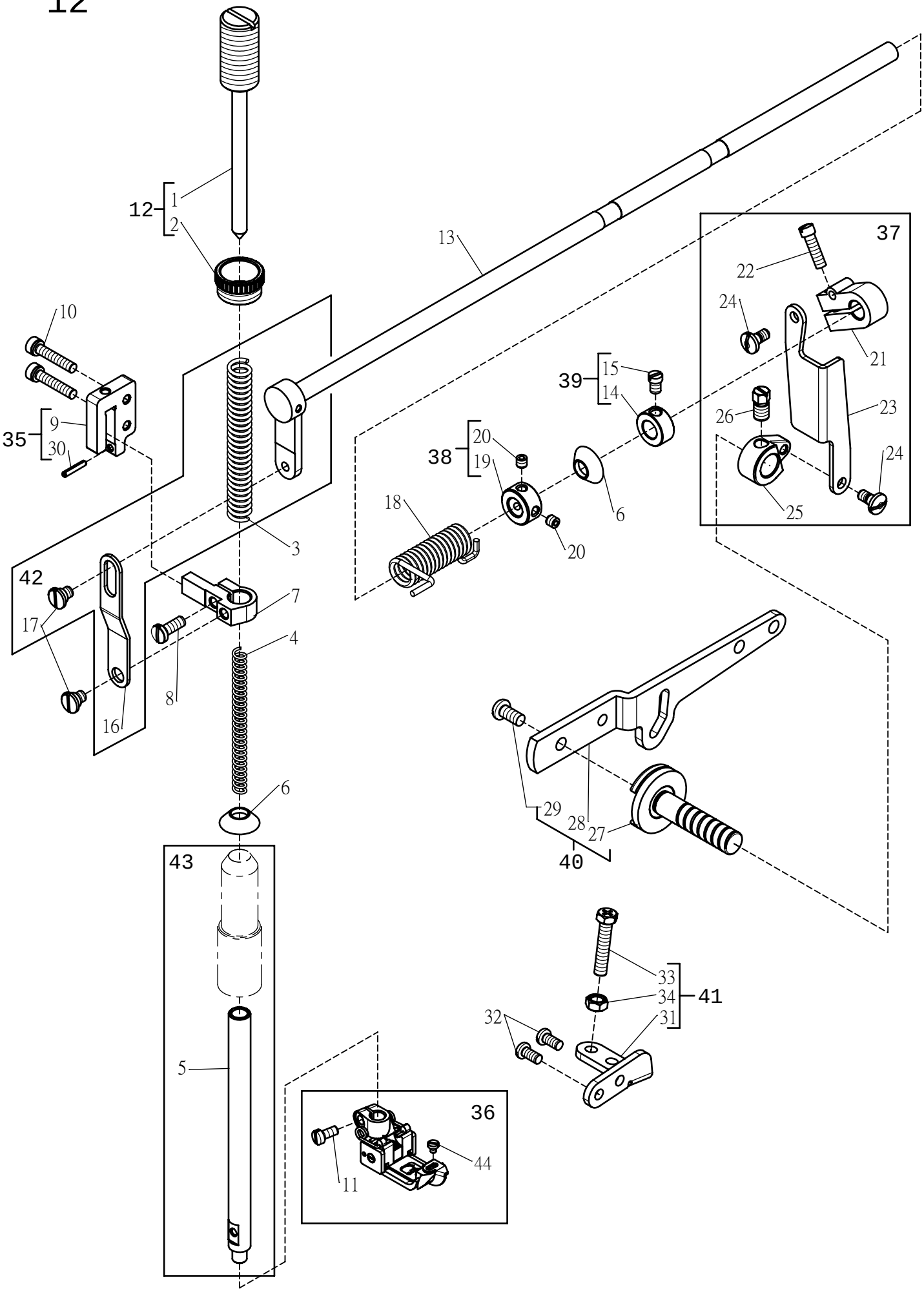
12
1
2
13
37
22
24
21
23
26
24
25
10
35
9
30
39
15
14
38
20
19
6
18
20
3
42
17
16
8
7
4
6
29
28
27
40
43
5
33
34
41
31
32
36
11
44

Ref. No.	Parts No.	Description	品　　名	Amt. Req.
1	W12-1	Adjusting Bar	調節棒	1
2	W12-2	Nut	調節螺帽	1
3	W12-3	Spring	彈簧	1
4	W12-4	Spring	彈簧	1
5	W12-5	Presser Bar	壓腳棒	1
6	W12-6	Seal Plug	油塞	2
7	W12-7	Presser Bar Clamp	壓腳棒導引塊	1
8	W12-8	Screw (11/64-40X11.5)	螺絲	1
9	W12-9	Guide	滑塊座	1
10	W12-10	Screw (M4-0.7X20)	螺絲	2
11	W12-11	Screw (9/64-40X7.5)	螺絲	1
12	W12-12	Adjusting Bar Assembly	調節棒組	1
13	W12-13	Lever	擺臂	1
14	W12-14	Collar	定位套環	1
15	W12-15	Screw (11/64-40X5.5)	螺絲	1
16	W12-16	Link	連接板	1
17	W12-17	Screw (3/16-32X3)	螺絲	2
18	W12-18	Spring	彈簧	1
19	W12-19	Collar	定位套環	1
20	P9-5	Screw (11/64-40X4)	螺絲	2
21	W12-21	Bell Crank (Upper)	上曲柄	1
22	W12-22	Screw (11/64-40X14.5)	螺絲	1
23	W12-23	Link	連接吊片	1
24	W12-24	Screw (11/64-40X4)	螺絲	2
25	W12-25	Bell Crank (Lower)	下曲柄	1
26	W12-26	Screw (1/4-40X7)	螺絲	1
27	W12-27	Shaft	軸	1
28	W12-28	Lever	壓腳提把	1
29	W11-19	Screw (M5-0.8X10)	螺絲	1
30	P6-7	Pin (2*L12)	插梢	1
31	W12-31	Bracket	壓腳行程調節托架	1
32	W3-24	Screw (M4-0.7X8)	螺絲	2
33	W12-33	Screw (M5-0.8X25)	螺絲	1
34	W8-3	Nut	螺帽	1
35	W12-35	Guide Assembly	滑塊座組	1
36	W12-36	Presser Foot Assembly	壓腳	1
37	W12-37	Link Assembly	連接吊片組	1
38	W12-38	Collar Assembly	定位套環組	1
39	W12-39	Collar Assembly	定位套環組	1
40	W12-40	Lever Assembly	壓腳提把組	1
41	W12-41	Bracket Assembly	壓腳行程調節托架組	1
42	W12-42	Lever Assembly	壓腳提把組	1
43	W12-43	Bracket Assembly	壓腳行程調節托架組	1
44	W12-44	Screw (3/32-56X3)	螺絲	1

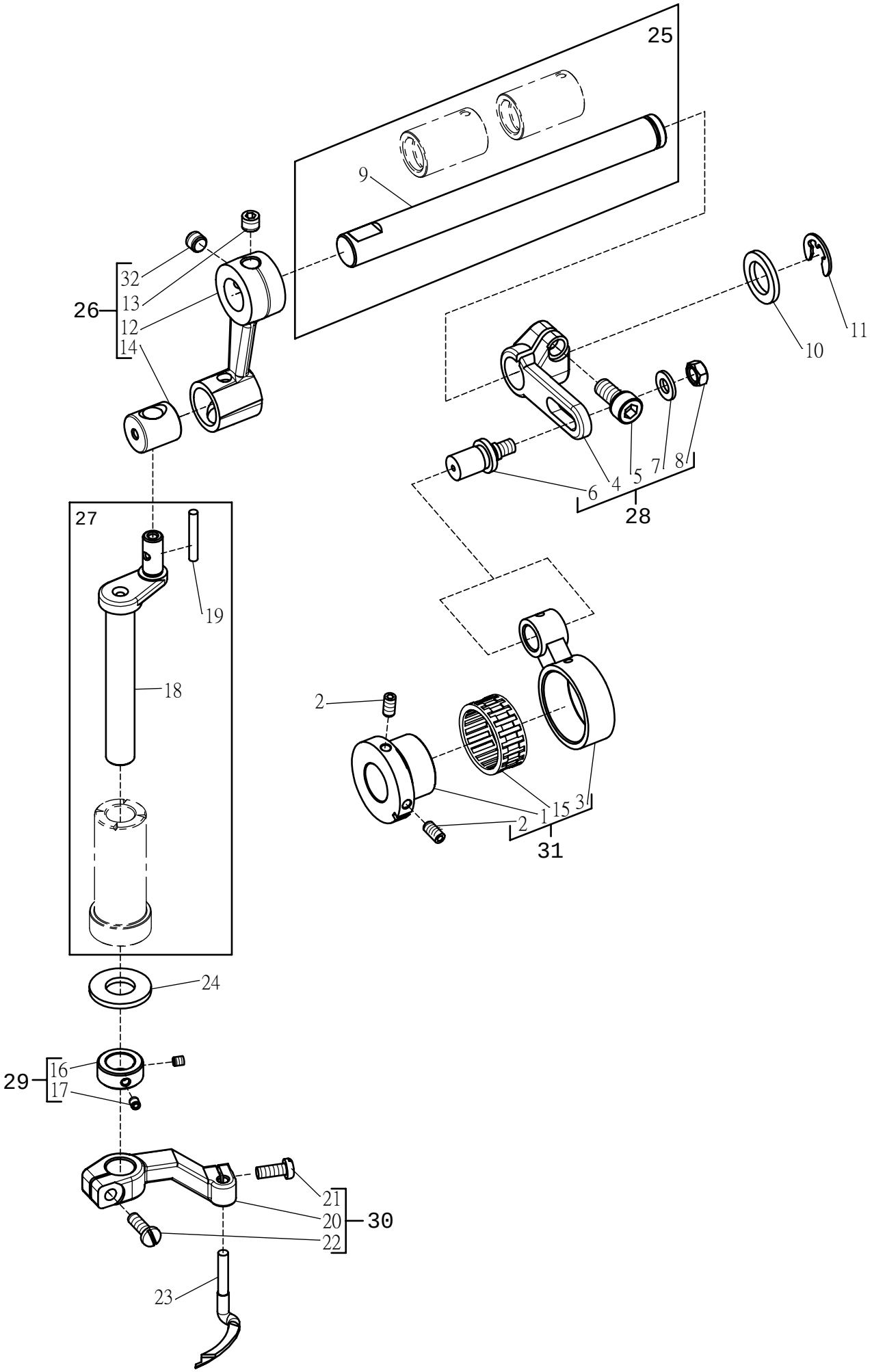
25
9
26
32
13
12
14
11
10
4
5
7
8
6
28
27
19
18
2
1
15
3
2
31
24
29
16
17
21
20
22
30
23

Ref. No.	Parts No.	Description	品　名	Amt. Req.
1	W13-1	Eccentric	偏心襯套	1
2	W13-2	Screw (M4-0.7X8)	螺絲	2
3	W13-3	Connection	連桿	1
4	W13-4	Crank	曲柄	1
5	W6-13	Screw (M6-0.75X12)	螺絲	1
6	W13-6	Screw Pin	插銷	1
7	P8-8	Washer	墊片	1
8	W8-3	Nut	墊帽	1
9	W13-9	Shaft	軸	1
10	W13-10	Washer	墊片	1
11	P5-31	Ring	E型扣環	1
12	W13-12	Crank	曲柄	1
13	W9-17	Screw (M6-0.75X5)	螺絲	1
14	W13-14	Block	滑塊	1
15	W9-4	Needle Bearing	滾針軸承	1
16	W13-16	Collar	定位套環	1
17	W13-17	Screw (1/8-44X3.5)	螺絲	2
18	W13-18	Crankshaft	曲軸	1
19	P4-20	Oil Wick	給油線	1
20	W13-20	Lever	彎針臂	1
21	W13-21	Screw (M4-0.7X10)	螺絲	1
22	W13-22	Screw (M4-0.7X12)	螺絲	1
23	W13-23	Spreader	上彎針	1
24	W13-24	Oil Guard	封油墊片	1
25	W13-25	Shaft Assembly	軸組	1
26	W13-26	Crank Assembly	曲柄組	1
27	W13-27	Crankshaft Assembly	曲柄組	1
28	W13-28	Crank Assembly	曲柄組	1
29	W13-29	Collar Assembly	定位套環組	1
30	W13-30	Lever Assembly	彎針臂組	1
31	W13-31	Eccentric Assembly	偏心襯套組	1
32	W5-13	Screw (M6-0.75X5)	螺絲	1

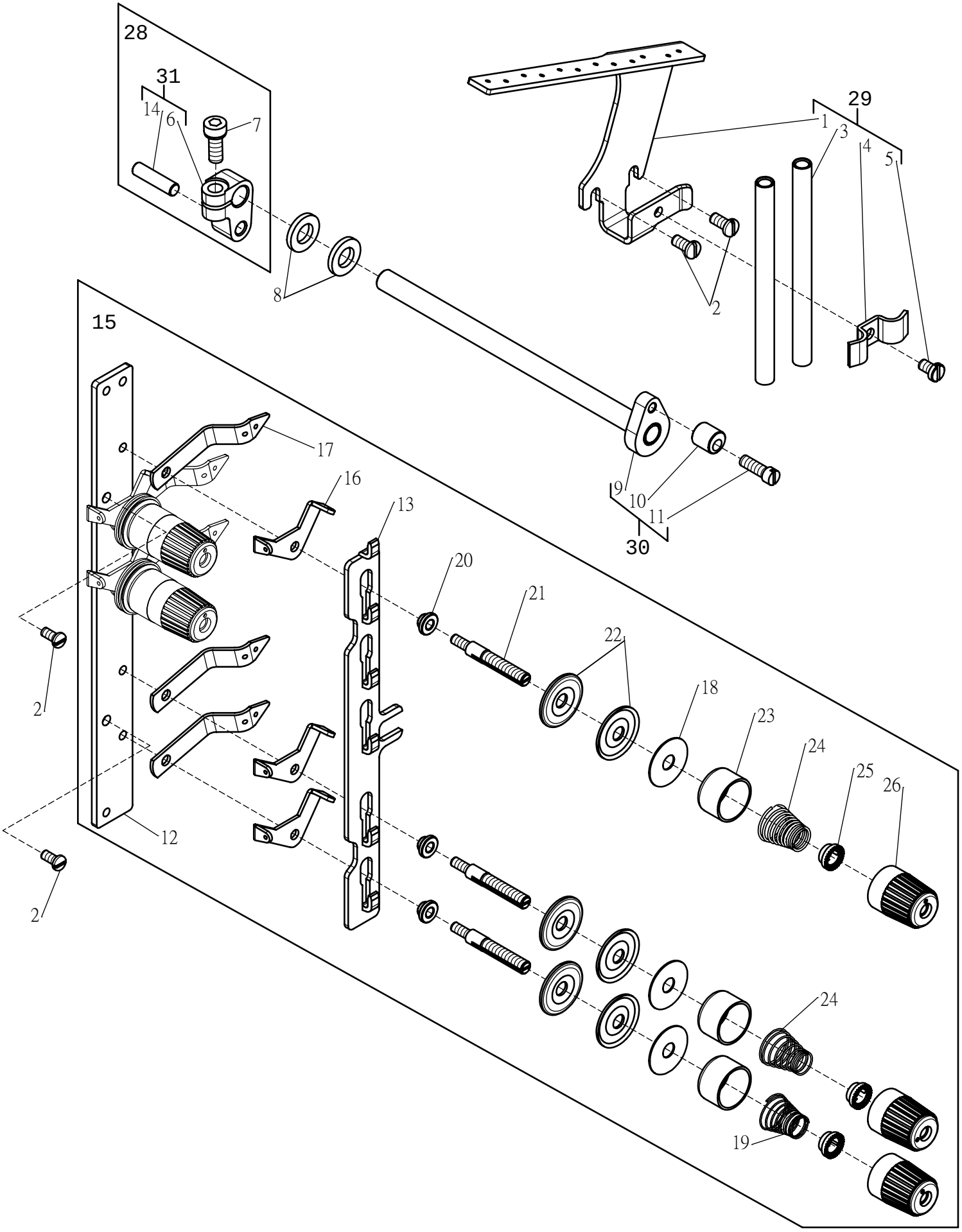
28
31
14
6
7
29
1
3
4
5
8
2
15
17
16
13
9
10
11
30
20
21
22
18
23
24
25
26
2
12
2
24
19

Ref. No.	Parts No.	Description	品　　名	Amt. Req.
1	W14-1	Thread Guide	導線架	1
2	W3-24	Screw (M4-0.7X8)	螺絲	4
3	W14-3	Pipe	導線管	2
4	W14-4	Latch	導線管定位片	1
5	W1-16	Screw (M4-0.7X6)	螺絲	1
6	W14-6	Crank	曲柄	1
7	W9-3	Screw (M5-0.8X12)	螺絲	1
8	W14-8	Washer	墊片	2
9	W14-9	Lever	擺臂	1
10	W14-10	Collar	偏心定位套環	1
11	W14-11	Screw (11/64-40X12.5)	螺絲	1
12	W14-12	Bracket	鬆線裝置底座	1
13	W14-13	Thread Releaser	鬆線輔導板	1
14	W14-14	Pin	插銷	1
15	W14-15	Tension Control Mechanism	沙拉組	1
16	W14-16	Thread Guide	導線片	5
17	W14-17	Thread Guide	導線片	5
18	W14-18	Felt	羊毛氈	5
19	W14-19	Spring (Light)	彈簧(弱)	1
20	W14-20	Tension Post Collar	隔環	5
21	W14-21	Screw Stud	螺樁	5
22	W14-22	Tension Disc	夾線片	10
23	W14-23	Cup	彈簧護圈	5
24	W14-24	Spring (Heavy)	彈簧(強)	3
25	W14-25	Spring Bushing	棘齒輪	5
26	W14-26	Post Nut	鬆線調整螺帽	5
27	W14-27	Spring (Middle)	彈簧(中)	1
28	W14-28	Crank Assembly	曲柄組	1
29	W14-29	Thread Guide Assembly	導線組	1
30	W14-30	Lever Assembly	擺臂組	1
31	W14-31	Crank Assembly	曲柄組	1

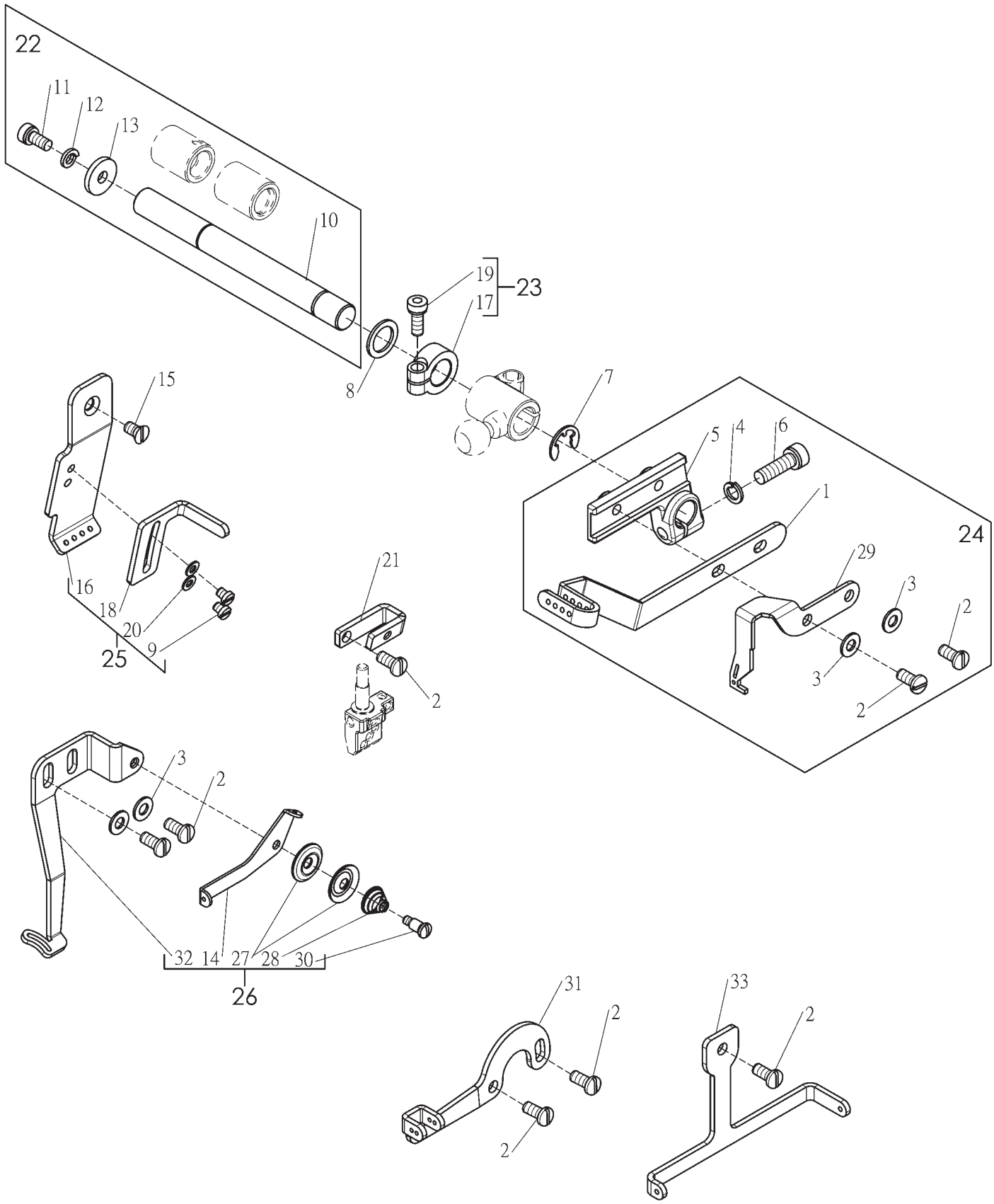
22
11
12
13
10
19
23
17
8
7
15
5
4
6
1
24
29
3
2
3
2
16
18
20
9
25
21
2
3
2
32
14
27
28
30
26
31
2
2
33
2

Ref. No.	Parts No.	Description	品　　名	Amt. Req.
1	W15-1	Thread Takeup	導線片	1
2	W3-24	Screw (M4-0.7X8)	螺絲	8
3	W7-44	Washer	墊片	4
4	W15-4	Spring Washer	彈簧華司	1
5	W15-5	Lever	鬆動臂	1
6	W15-6	Screw (M5-0.8X16)	螺絲	1
7	W15-7	C-Ring	C型扣環	1
8	W15-8	Washer	墊片	1
9	W15-9	Screw (1/8-44X3.5)	螺絲	2
10	W15-10	Shaft	軸	1
11	P13-2	Screw (M4-0.7X8)	螺絲	1
12	W8-8	Spring Washer	彈簧華司	1
13	W15-13	Washer	墊片	1
14	W15-14	Thread Guide	導線片	1
15	W15-15	Screw (M4-0.7X7)	螺絲	1
16	W15-16	Thread Guide	導線片	1
17	W15-17	Collar	軸環	1
18	W15-18	Thread Support	導線輔助片	1
19	W8-15	Screw (M4-0.7X10)	螺絲	1
20	W15-20	Washer	墊片	2
21	W15-21	Thread Guide Bracket	夾線架	1
22	W15-22	Shaft Assembly	軸組	1
23	W15-23	Collar Assembly	軸環組	1
24	W15-24	Thread Guide Assembly	導線片組	1
25	W15-25	Thread Guide Assembly	導線片組	1
26	W15-26	Thread Guide Assembly	導線片組	1
27	W15-27	Tension Disc	夾線片	2
28	W15-28	Spring	彈簧	1
29	W15-29	Thread Takeup	導線片	1
30	W15-30	Screw (1/8-44X3.5)	螺絲	1
31	W15-31	Thread Guide	導線片	1
32	W15-32	Thread Guide	導線片	1
33	W15-33	Thread Guide	導線片	1

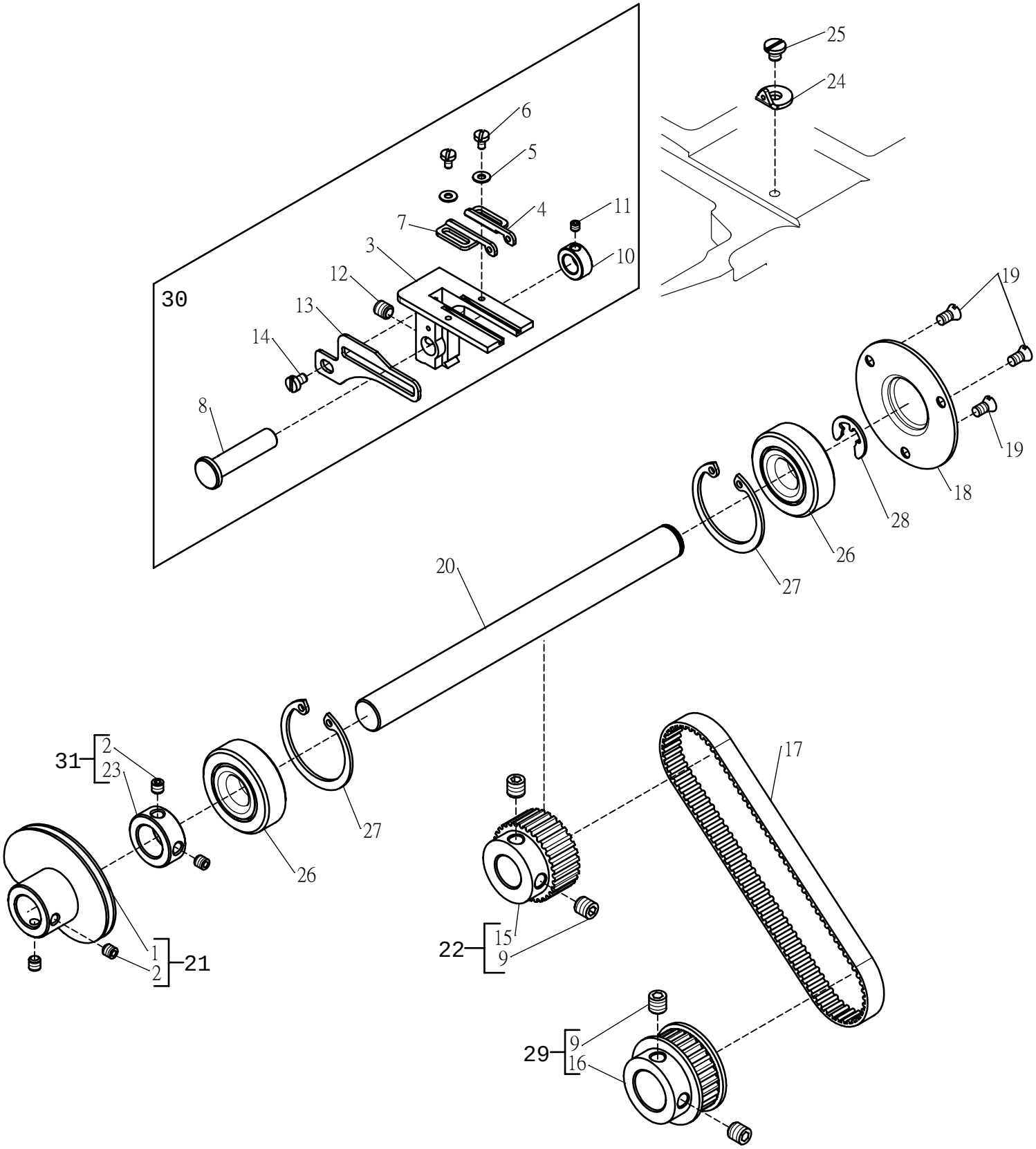
25
24
6
5
4
11
7
3
10
12
30
13
14
8
19
19
18
28
26
27
20
17
31
2
23
27
26
1
2
21
22
15
9
29
9
16

Ref. No.	Parts No.	Description	品　　名	Amt. Req.
1	W16-1	Looper Thread Takeup	收線凸輪	1
2	W3-35	Screw (M4-0.7X4)	螺絲	4
3	W16-3	Bracket / Looper Thread Guide	導線架	1
4	W16-4	Thread Guide	導線片	1
5	W16-5	Washer	墊片	2
6	W16-6	Screw (M2.5-0.45X4)	螺絲	2
7	W16-7	Thread Guide	導線片	1
8	W16-8	Shaft	軸	1
9	P13-6	Screw (M6-1X6)	螺絲	4
10	W16-10	Collar	套環	1
11	W16-11	Screw (M3-0.5X3)	螺絲	1
12	W6-15	Screw (M5-0.8X5)	螺絲	1
13	W16-13	Thread Support	撥線片	1
14	W3-30	Screw (M3-0.5X4.5)	螺絲	1
15	W16-15	Gear Wheel	齒輪	1
16	W16-16	Gear Wheel	齒輪	1
17	W16-17	Timing Belt	時規皮帶	1
18	W16-18	Feed Drive Shaft Cover	止油蓋	1
19	P1-27	Screw (9/64-40X7)	螺絲	3
20	W16-20	Shaft	軸	1
21	W16-21	Lever Assembly	收線凸輪組	1
22	W16-22	Gear Wheel Assembly	齒輪組	1
23	W16-23	Collar	定位套環	1
24	W8-35	Thread Eyelet	過線片	1
25	W24-19	Screw (M4-0.7X4)	螺絲	1
26	W16-26	Bearing	培林	2
27	W16-27	Ring (RTW-32)	C型扣環	2
28	P5-31	Ring (ETW-10)	E型扣環	1
29	W16-29	Gear Wheel Assembly	齒輪組	1
30	W16-30	Bracket / Looper Thread Guide Assembly	導線架組	1
31	W16-31	Collar Assembly	定位套環組	1

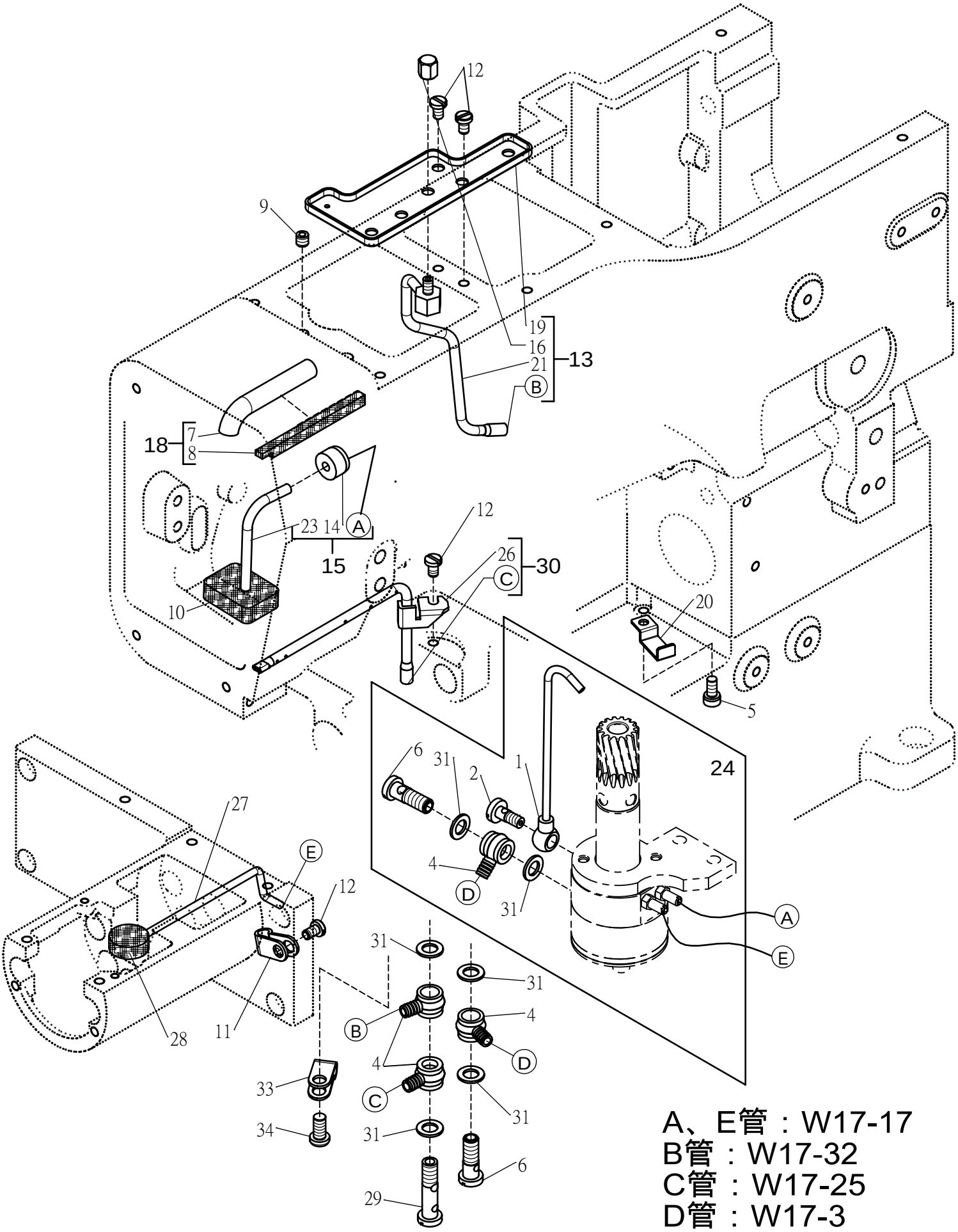

A、E管：W17-17
B管：W17-32
C管：W17-25
D管：W17-3

Ref. No.	Parts No.	Description	品　　名	Amt. Req.
1	W17-1	Pipe	給油銅管	1
2	W17-2	Joint Screw	螺絲接管	1
3	W17-3	Tube	油管	1
4	W17-4	Joint	接頭	4
5	P13-2	Screw (M4-0.7X6)	螺絲	1
6	W17-6	Joint Screw	螺絲接管	2
7	W17-7	Pipe	銅管	1
8	W17-8	Felt	羊毛氈	1
9	W6-15	Screw (M5-0.8X5)	螺絲	1
10	W17-10	Felt	羊毛氈	1
11	G1-64	Cord Clamp (UC-0, 1/8")	線套	1
12	W1-16	Screw (M4-0.7X6)	螺絲	4
13	W17-13	Oil Distributor Assembly	噴油管組	1
14	W17-14	Suction Pipe Bushing	回油管襯套	1
15	W17-15	Pipe Assembly	回油銅管組	1
16	W17-16	Nut	螺帽	1
17	W17-17	Tube	油管	2
18	W17-18	Pipe Assembly	銅管組	1
19	W17-19	Oil Release Plug	滴油座	1
20	W17-20	Guide	固定板	1
21	W17-21	Oil Distributor	噴油管	1
22				
23	W17-23	Pipe	回油銅管	1
24	W17-24	Pipe Assembly	給油銅管組	1
25	W17-25	Oil Tube	油管	1
26	S17-26	Oil Distributor	噴油管	1
27	S17-27	Pipe	銅管	1
28	W17-28	Felt	羊毛氈	1
29	W17-29	Joint Screw	螺絲接頭	1
30	S17-30	Oil Distributor Assembly	噴油管組	1
31	W17-31	Washer	墊片	6
32	W17-32	Oil Tube	油管	1
33	P15-7	Cord Clamp (UC-0.5, 3/16")	線套	1
34	W6-3	Screw (M5-0.8X10)	螺絲	1

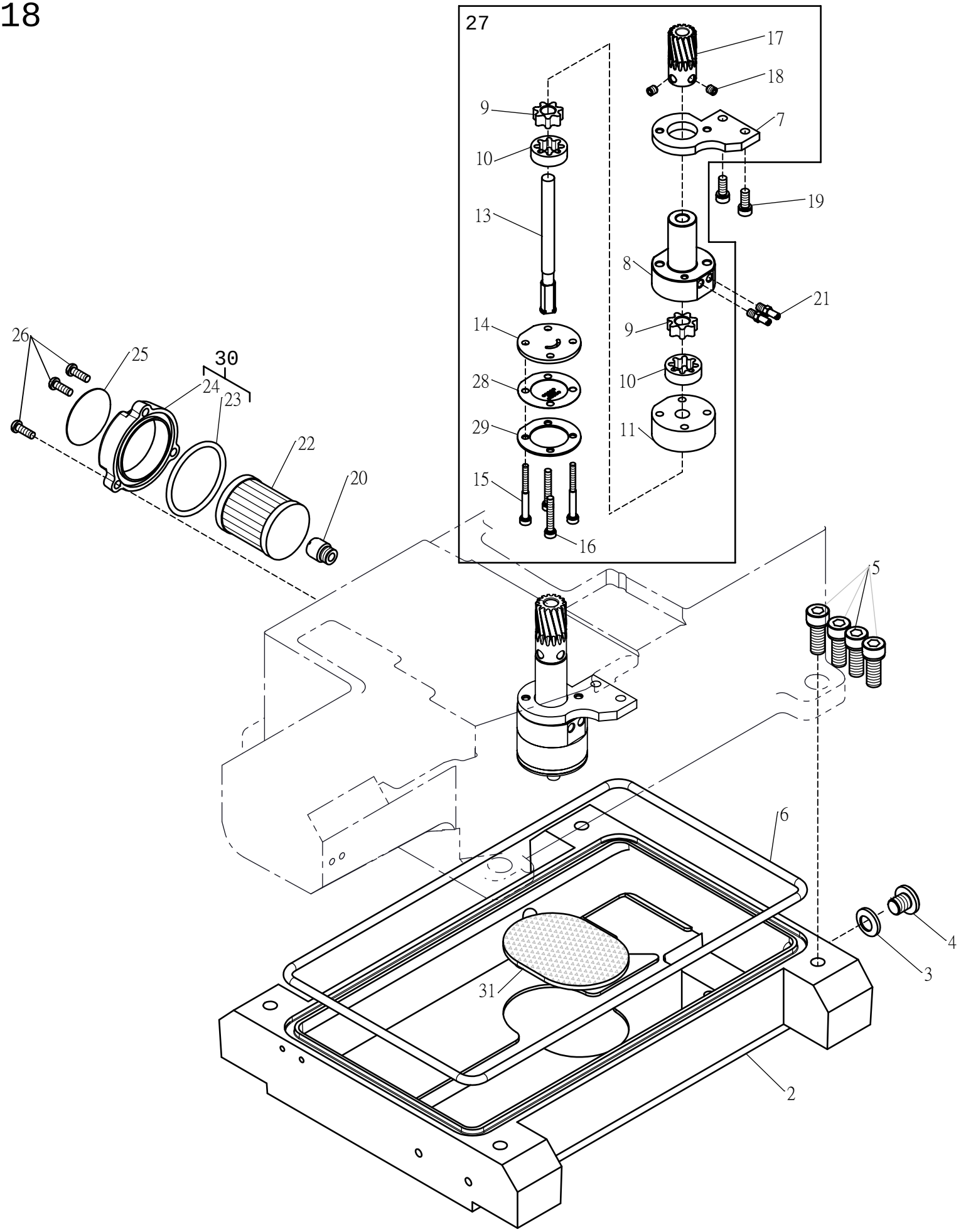
27
17
18
9
7
10
19
13
8
21
14
9
26
25
30
24
23
28
10
29
11
22
20
15
16
5
6
4
3
31
2

Ref. No.	Parts No.	Description	品　　名	Amt. Req.
1				
2	W18-2	Oil Reservoir	油槽	1
3	W18-3	Gasket	防油墊片	1
4	W18-4	Screw (3/8-28X10)	螺絲	1
5	W18-5	Screw (M8-1.25X20)	螺絲	4
6	W18-6	O-Ring	油環	1
7	W18-7	Bracket	幫浦定位架	1
8	W18-8	Pump Body (Opper)	幫浦本體上座	1
9	W18-9	Rotor	內轉子	2
10	W18-10	Rotor	外轉子	2
11	W18-11	Pump Body (Lower)	幫浦本體下座	1
12				
13	W18-13	Shaft	幫浦軸	1
14	W18-14	Cover	幫浦底蓋	1
15	W18-15	Screw (M4-0.7X40)	螺絲	2
16	W18-16	Screw (M4-0.7X30)	螺絲	2
17	W18-17	Worm Wheel	齒輪	1
18	W6-15	Screw (M5-0.8X5)	螺絲	2
19	W9-3	Screw (M5-0.8X12)	螺絲	2
20	W18-20	Bracket /Oil Filter	螺樁	1
21	W18-21	Joint Screw	螺絲	2
22	W18-22	Oil Filter	濾網	1
23	W18-23	O-ring	0型油環	1
24	W18-24	Oil Filter Cover	濾網蓋	1
25	W18-25	Filter seal	濾網指示牌	1
26	W3-5	Screw (M4X0.7X12)	螺絲	3
27	W18-27	Pump Assembly	幫浦組	1
28	W18-28	Oil Filter Screen	過濾油網	1
29	W18-29	Cover	幫浦底蓋	1
30	W18-30	Oil Filter Cover Assembly	濾網蓋組	1
31	W18-31	Felt	羊毛氈	1

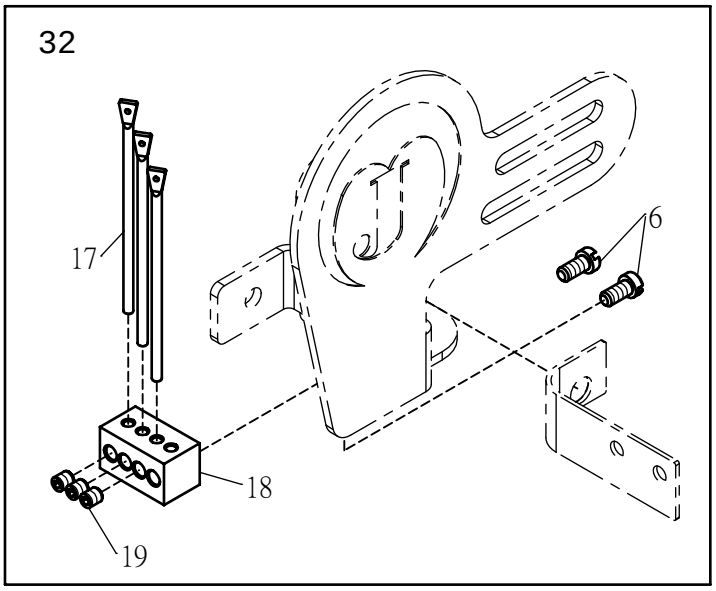
32
17
6
18
19

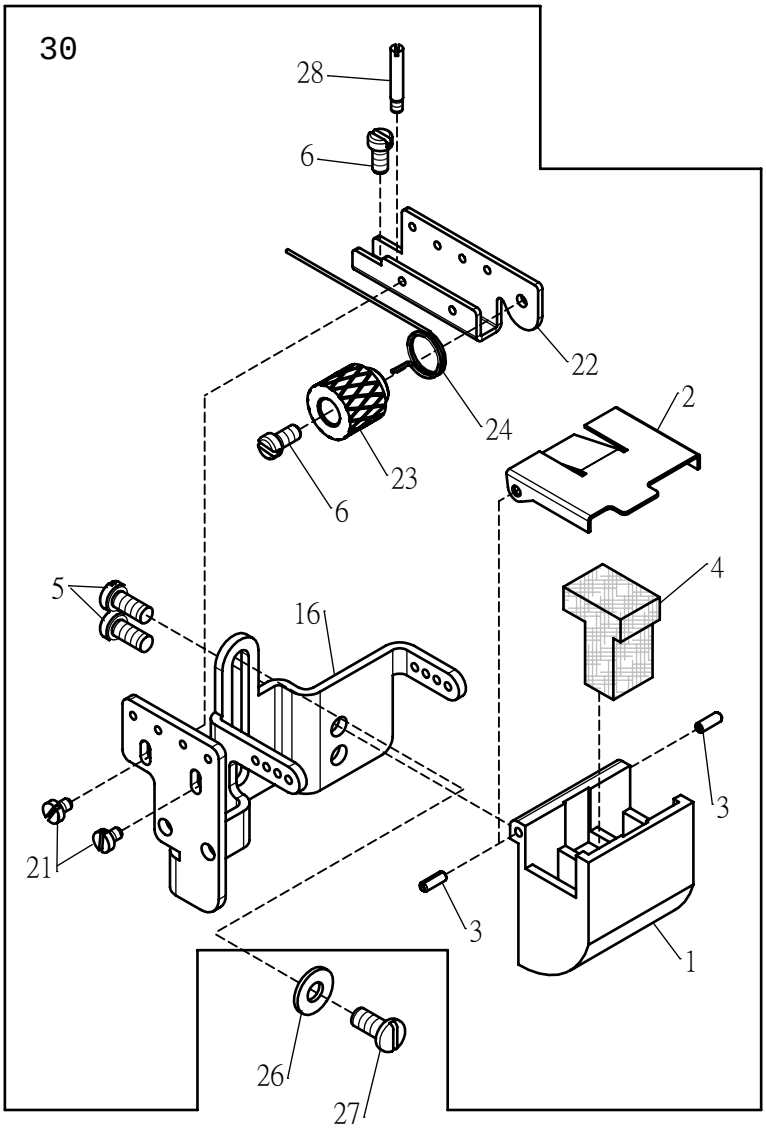
30
28
6
22
24
2
23
6
4
5
16
6
3
21
3
1
26
27

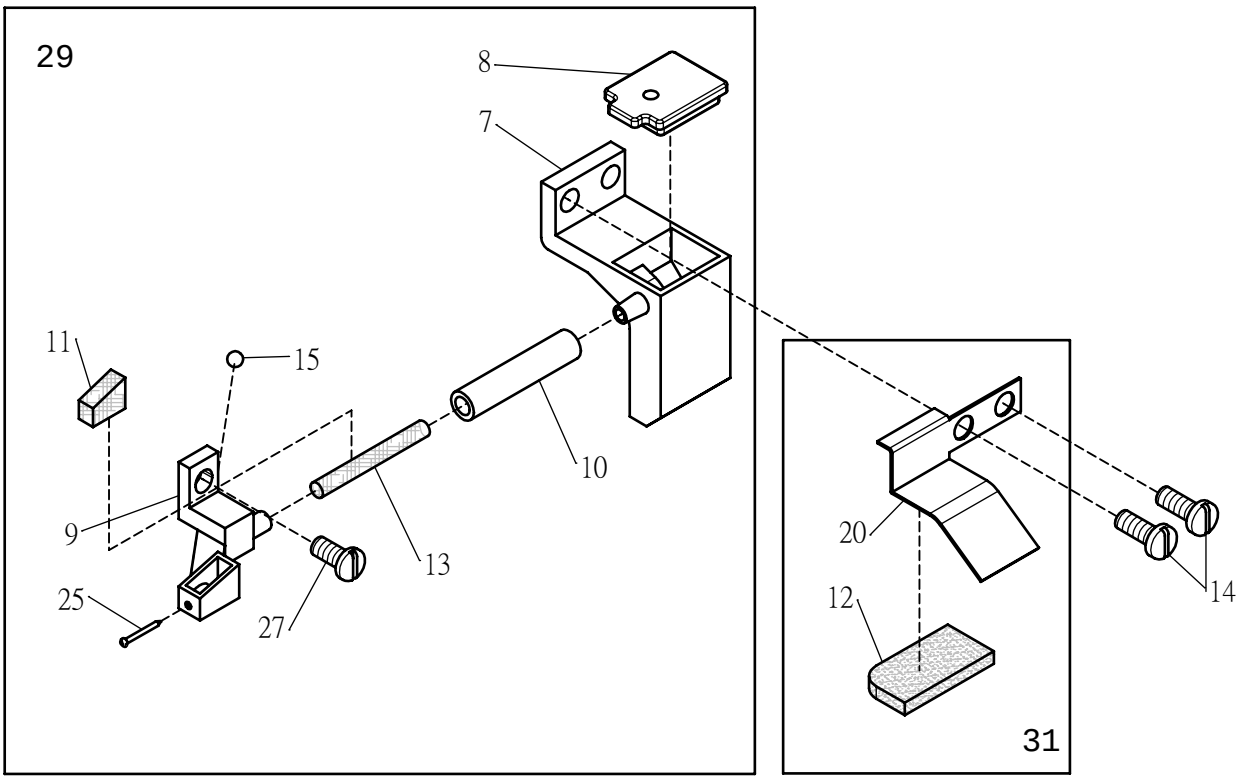
29
8
7
11
15
10
9
13
25
27
20
14
12
31

Ref. No.	Parts No.	Description	品　　名	Amt. Req.
1	W19-1	Oil Reservoir	蓄油槽	1
2	W19-2	Cap	蓄油槽蓋	1
3	P3-29	Hinge Pin (2*L6)	開口梢	2
4	W19-4	Felt	羊毛氈	1
5	W7-32	Screw (M3.5-0.6X8)	螺絲	2
6	P3-61	Screw (1/8-44X6.5)	螺絲	4
7	W19-7	Silicone Oil Reservoir	油壺	1
8	W19-8	Cover	油壺蓋	1
9	W19-9	Needle Cooler (Lower)	針冷卻器	1
10	W19-10	Tube (L=25mm)	油管	1
11	W19-11	Felt	羊毛氈	1
12	P11-39	Felt	羊毛氈	1
13	W19-13	Oil Wick	給油線	1
14	W13-21	Screw (M4-0.7*10)	螺絲	2
15	W19-15	Plug	鋼珠	1
16	W19-16	Thread Guide	導線片	1
17	W19-17	Thread Glide	導線桿	3
18	W19-18	Thread Holder	導線桿座	1
19	W13-17	Screw (1/8-44X3.5)	螺絲	3
20	W19-20	Cover	油蓋	1
21	P3-43	Screw (3/32-56X3)	螺絲	2
22	W19-22	Stitch Unlocked Mounting Bracket	跳線彈簧架	1
23	P3-63	Stitch Unlocked Spring Holder	跳線彈簧調整固定鈕	1
24	P3-62	Stitch Unlocked Spring	跳線彈簧	1
25	P9-15	Pin	插梢	1
26	W3-25	Washer	墊片	1
27	W3-24	Screw (M4-0.7X8)	螺絲	2
28	P3-60	Screw (11/128-56X3)	螺絲	1
29	W19-29	Silicone Oil Reservoir Assembly	插針散熱油壺組	1
30	W19-30	Oil Reservoir Assembly	蓄油槽組	1
31	W19-31	Cover Assembly	油蓋組	1
32	W19-32	Thread Holder Assembly	導線組	1

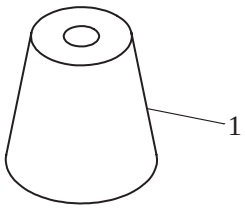
1

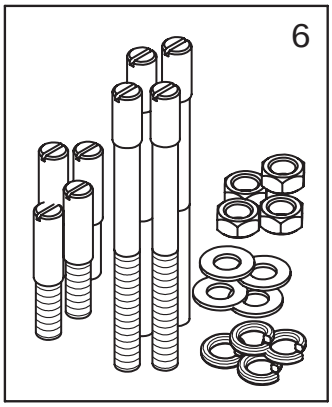
6

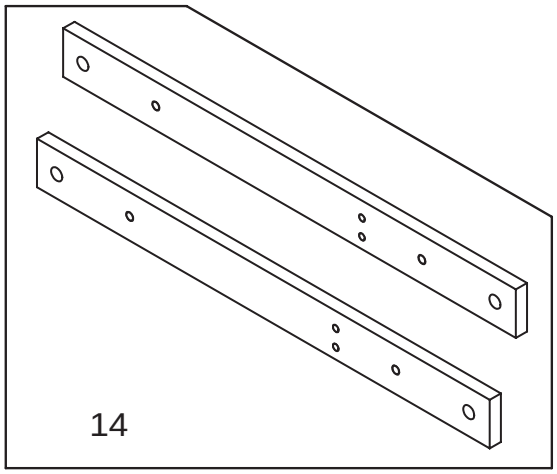
14

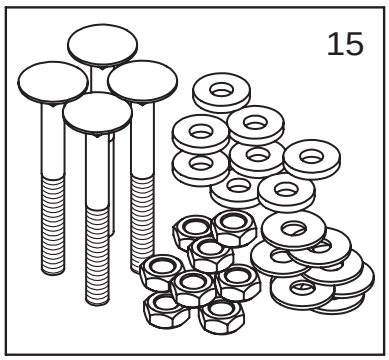
15

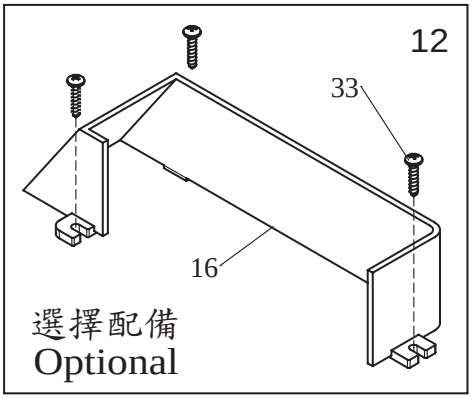
12
33
16
選擇配備
Optional

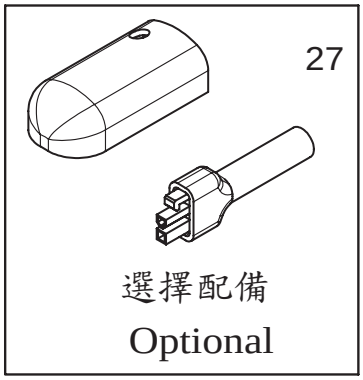
27
選擇配備
Optional

18

19

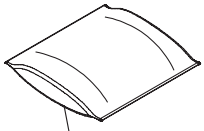
34

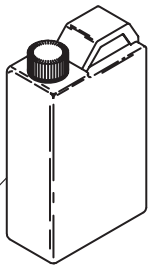
17

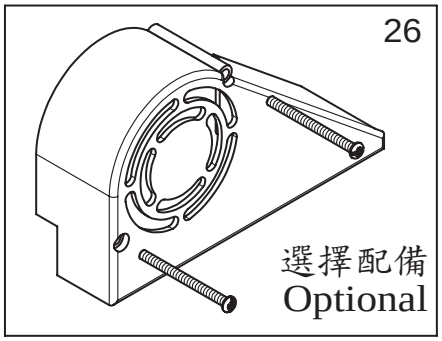
26
選擇配備
Optional

零 件 本
PARTS BOOK
20

維修手冊
INSTRUCTIONS
24

21

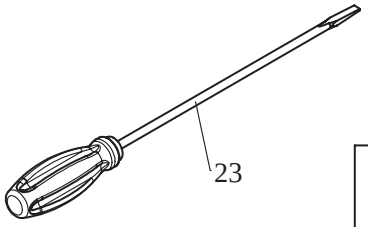
23

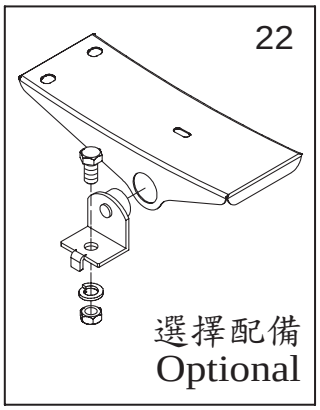
22
選擇配備
Optional

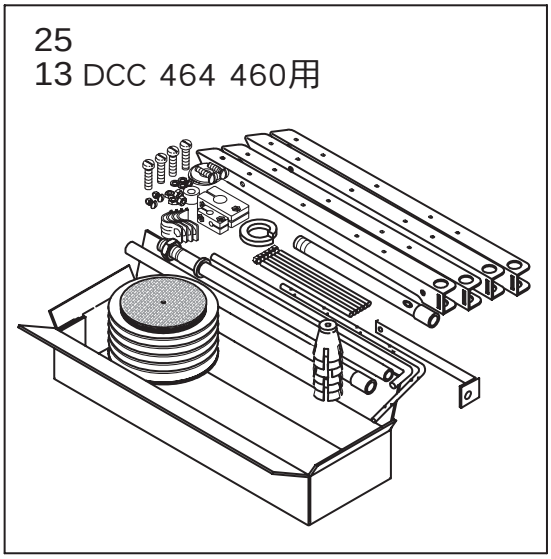
25
13 DCC 464 460用

Ref. No.	Parts No.	Description	品　　名	Amt. Req.
1	W20-1	Cushion Rubber	防振墊	4
6	W20-6	Screw Assembly	螺絲組	1
12	W20-12	Belt Cover Assembly	皮帶蓋組	1
13	W20-13	Thread Stand Assembly	線架組	1
14	W20-14	Bracket	支撐架	2
15	W20-15	Screw Assembly	螺絲組	1
16	W20-16	Belt Cover	皮帶蓋	1
17	W20-17	Oil	潤滑油	1
18	P20-1	Oiler	油壺	1
19	P20-2	Funnel	漏斗	1
20	S20-20	Parts Book	零件本	1
21	P20-10	Machine Cover	防塵罩	1
22	P20-12	Pedal Assembly	壓腳踏板組	1
23	P20-5	Screwdriver	螺絲起子	1
24	S20-24	Instruction Book	維修手冊	1
25	W20-25	Thread Stand Assembly	線架組	1
26	W20-26	Pulley Cover Assembly	皮帶輪蓋組	1
27	W20-27	Lamp Assembly	燈組	1
33	W20-33	Screw	木螺絲	3
34	P20-13	Drier	乾燥劑	1

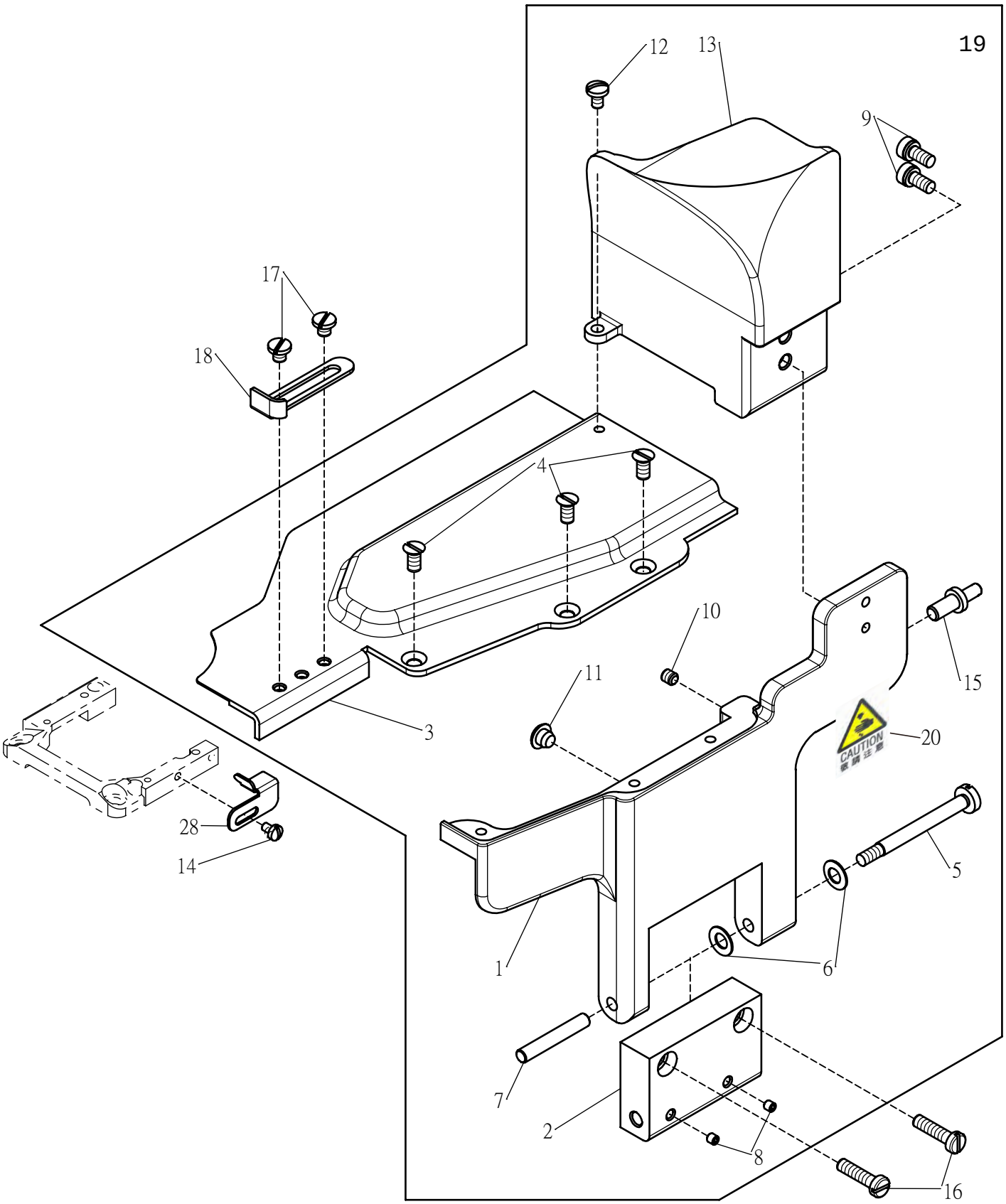
19
12
13
9
17
18
4
10
11
15
3
20
CAUTION
28
14
5
1
6
7
2
8
16

Ref. No.	Parts No.	Description	品　　名	Amt. Req.
1	S22-1	Front Cover	前蓋	1
2	W22-2	Hinge	鉸鍊	1
3	S22-3	Auxiliary Plate/Front Cover	防油蓋	1
4	W22-4	Screw (M4-0.7X8)	螺絲	3
5	W22-5	Screw	螺栓	1
6	W22-6	Spring	簧片	2
7	W22-7	Pin	軸承梢	1
8	W16-11	Screw (M3-0.5X3)	螺絲	2
9	P13-2	Screw (M4-0.7X8)	螺絲	2
10	W3-35	Screw (M4-0.7X4)	螺絲	1
11	W4-7	Cushion	防振墊	1
12	P1-11	Screw (9/64-40X5.5)	螺絲	1
13	W22-13	Takeup Cover	凸輪蓋	1
14	W28-19	Screw (M2.6-0.45X4)	螺絲	1
15	W22-24	Eccentric Pin	調整鈕	1
16	W22-27	Screw (M4-0.7X16)	螺絲	2
17	W24-19	Screw (M4-0.7X4)	螺絲	2
18	S22-18	Fabric Edge Guide(Left)	左檔邊	1
19	S22-19	Front Cover Assembly	前蓋組	1
20	P1-22	Warning Sticker	警告貼紙	1
28	S22-28	Fabric Edge Guide	檔邊	1

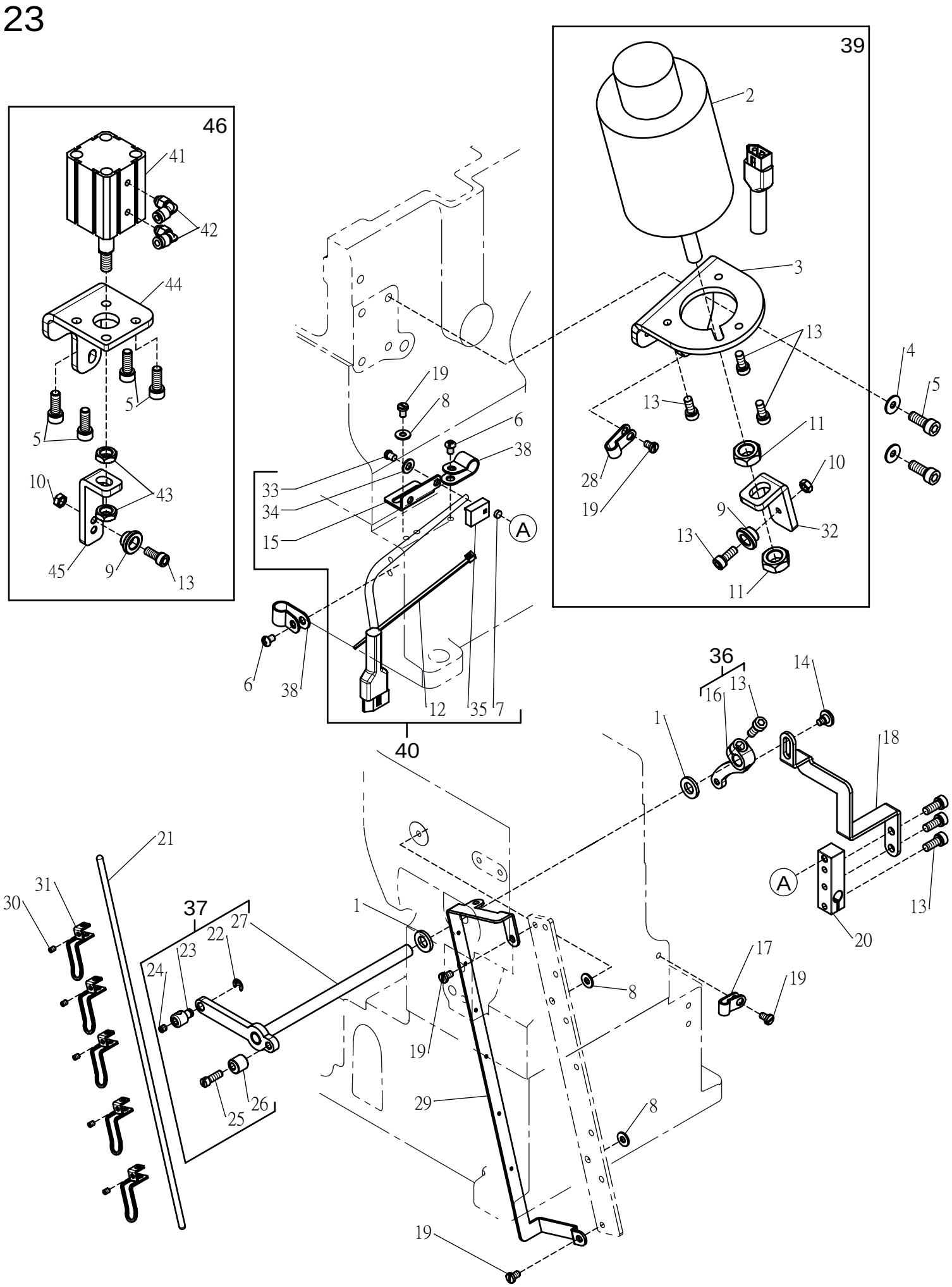
46
41
42
44
5
5
10
43
45
9
13
39
2
3
13
4
5
13
11
28
10
19
9
32
13
11
19
8
6
38
33
34
15
A
6
38
12
35
7
40
36
14
16
13
1
18
A
13
20
21
31
30
37
27
22
23
24
1
17
19
8
19
26
25
29
8
19

Ref. No.	Parts No.	Description	品　　名	Amt. Req.
1	W14-8	Washer	墊片	2
2	W23-2	Presser Foot Lifter Solenoid	抬壓腳電磁閥	1
3	W23-3	Solenoid Bracket	電磁閥吊架	1
4	P13-16	Washer	墊片	2
5	P13-15	Screw (M6-1X15)	螺絲	6
6	P2-33	Screw (M4-0.7X6)	螺絲	2
7	W23-7	Magnet	磁鐵	1
8	W3-25	Washer	墊片	3
9	W23-9	Wheel	滾輪	2
10	W8-3	Nut	螺帽	2
11	W23-11	Nut	螺帽	2
12	P13-37	Band (12cm)	束帶(12cm)	1
13	W9-3	Screw (M5-0.8X12)	螺絲	9
14	W23-14	Screw (M4-0.7X4)	螺絲	1
15	W23-15	Synchroniser Place	定位感應器座	1
16	W23-16	Tension Release Lever	張力釋放槓桿	1
17	P15-7	Cord Clamp (UC-0.5,3/16")	線套	1
18	W23-18	Tension Release Connecting Plate	張力釋放連接板	1
19	W1-16	Screw (M4-0.7X6.5)	螺絲	5
20	W23-20	Tension Release Block	張力釋放滑塊	1
21	W23-21	Thread Pull-off Bar	過線鬆線桿	1
22	W9-40	Ring	C型扣環	1
23	W23-23	Thread Pull-off Bar Holder	過線鬆線桿固定座	1
24	W3-35	Screw (M4-0.7X4)	螺絲	1
25	W14-11	Screw (11/64-40X12.5)	螺絲	1
26	W14-10	Collar	偏心定位套環	1
27	W23-27	Lever	擺臂	1
28	W23-28	Cord Clamp (UC-1,1/4")	線套	1
29	W23-29	Thread Pull-off Eyelet	過線鬆線架	1
30	W23-30	Screw (M3-0.5X4)	螺絲	5
31	W23-31	Hook	鬆線鉤	5
32	W23-32	Activity Shelf	活動架	1
33	W23-33	Screw (11/64-40X5)	螺絲	1
34	W23-34	Washer	墊片	1
35	W23-35	Synchroniser	定位感應器	1
36	W23-36	Tension Release Lever Assembly	張力釋放槓桿組	1
37	W23-37	Lever Assembly	擺臂組	1
38	W3-18	Cord Clamp (UC-2,3/8")	線套	2
39	W23-39	Presser Foot Lifter Solenoid Assembly	抬壓腳電磁閥	1
40	W23-40	Synchroniser Place Assembly	定位感應器組	1
41	P14-7	Air Cylinder	氣缸	1
42	P14-6	L" Connector (M5*4mm)	L’’形風管接頭	2
43	P14-8	Nut	螺帽	2
44	W23-44	Cylinder Bracket	氣缸座	1
45	W23-45	Activity Shelf	活動架	1
46	W23-46	Air Cylinder Assembly	氣缸組	1

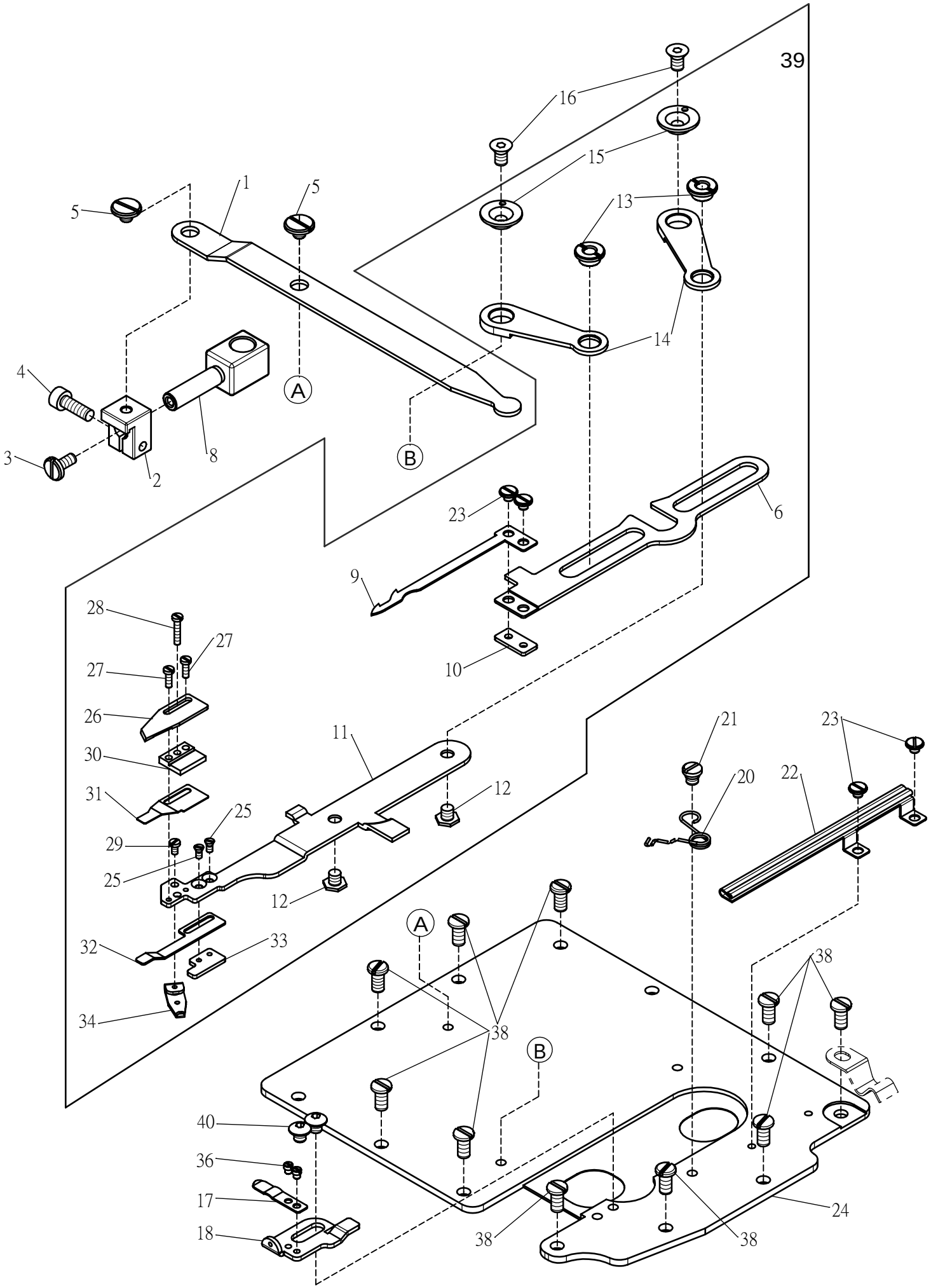
39
16
15
13
14
1
5
5
4
3
2
8
A
B
23
6
9
10
28
27
27
26
30
31
25
29
25
11
12
12
21
20
23
22
32
33
34
A
38
38
B
40
36
17
18
38
38
24

Ref. No.	Parts No.	Description	品　　名	Amt. Req.
1	W24-1	Lower Knife Driving Lever	下切刀驅動連桿	1
2	W24-2	Connecting Block	連結滑塊	1
3	P8-42	Screw (9/64-40X8)	螺絲	1
4	W7-10	Screw (M4-0.7X12)	螺絲	1
5	W24-5	Screw (M4-0.7X2.5)	螺絲	2
6	W24-6	Lower Knife Carrier	下切刀托架	1
7				
8	W24-8	Connecting Plug	下切刀插接頭	1
9	W24-9	Lower Moving Knife	下活動刀	1
10	W24-10	Lower Knife Holder	下切刀固定座	1
11	W24-11	Upper Fixing Knife Carrier	上固定刀托架	1
12	W24-12	Screw (M4-0.7X4)	螺絲	2
13	W24-13	Nut	螺帽	2
14	W24-14	Knife Guide Lever	切刀導引搖臂	2
15	W24-15	Knife Guede Lever Eccentric Ring	切刀導引搖臂偏心輪	2
16	W24-16	Screw (M4-0.7X7)	螺絲	2
17	W24-17	Clamp Spring	彈簧片	1
18	W24-18	Thread Guide	導線片	1
19				
20	W24-20	Upper Knife Carrier Spring	上固定刀托架復進簧	1
21	W24-21	Screw (M4-0.7X2.6)	螺絲	1
22	W24-22	Looper Thread Guide	底線過線護槽	1
23	W24-23	Screw (M3-0.5X2.5)	螺絲	4
24	S24-24	Crank Chamber Cover	曲柄軸室蓋	1
25	W24-25	Screw (M2-0.4X4)	螺絲	2
26	W24-26	Upper Fixing Knife	上固定刀	1
27	W24-27	Screw (M2-0.4X6)	螺絲	2
28	W24-28	Screw (M2-0.4X10)	螺絲	1
29	W24-29	Screw (M2-0.4X3.5)	螺絲	1
30	W24-30	Upper Fixing Guide	上固定刀導引架	1
31	W24-31	Clamp Spring	夾緊彈簧片	1
32	W24-32	Clamp Spring Pressure	夾緊壓力彈簧刀片	1
33	W24-33	Clamp Spring Pressure Holder	夾緊壓力彈簧固定座	1
34	W24-34	Clamp Spring Pressure Adjusting Piece	壓力彈簧調整片	1
35				
36	P6-38	Screw (3/32-56X2)	螺絲	2
37				
38	W4-3	Screw (M4-0.7X8)	螺絲	10
39	W24-39	Lower Knife Assembly	下切刀組	1
40	W24-40	Screw (M4-0.7X4)	螺絲	2

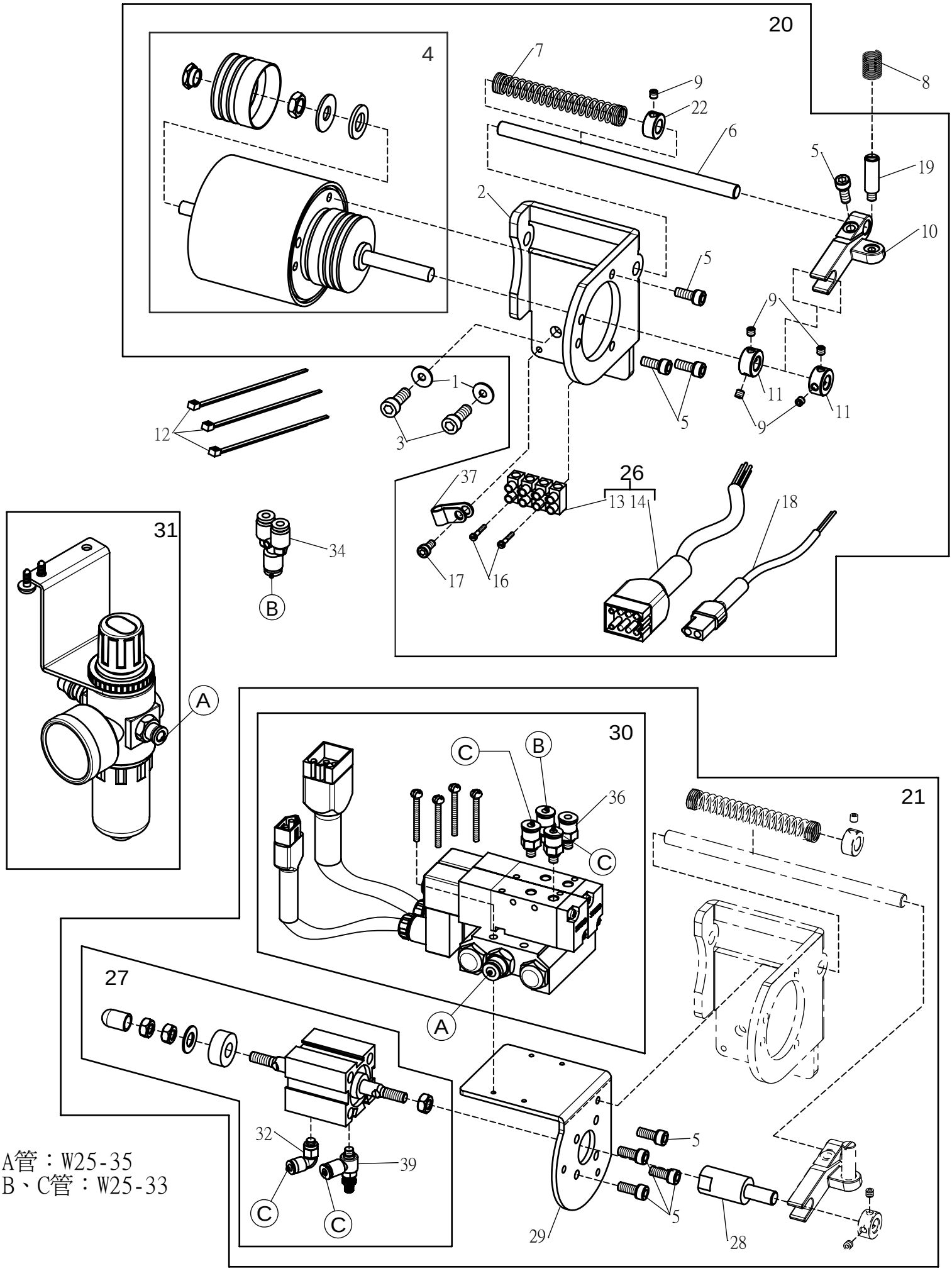

A管：W25-35
B、C管：W25-33

Ref. No.	Parts No.	Description	品　　名	Amt. Req.
1	P13-16	Washer	墊片	2
2	W25-2	Trimming Solenoid Support	下切刀電磁閥座	1
3	P13-15	Screw (M6-1X15)	螺絲	2
4	W25-4	Trimming Solenoid	下切刀電磁閥	1
5	W9-3	Screw (M5-0.8X12)	螺絲	8
6	W25-6	Return Shaft	復進軸	1
7	W25-7	Spring	彈簧	1
8	W25-8	Spring	彈簧	1
9	P9-5	Screw (11/64-40X4)	螺絲	7
10	W25-10	Plunger	柱塞接頭	1
11	W12-19	Collar	定位套環	2
12	P13-37	Band (12cm)	束帶(12cm)	3
13	W25-13	Terminal Holder	端子台	1
14	W25-14	Terminal Thread	中繼線	1
15				
16	P7-44	Screw (3/32-56X8)	螺絲	2
17	P13-2	Screw (M4-0.7X8)	螺絲	1
18	W25-18	Terminal Thread	中繼線	1
19	W25-19	Screw (M5-0.8X6)	螺絲	2
20	W25-20	Electric Type Under Thread Trimmer Assembly	電動下切刀組	1
21	W25-21	Pneumatic Type Under Thread Trimmer Assembly	氣動下切刀組	1
22	W12-14	Colar	定位套環	1
23				
24				
25				
26	W25-26	Terminal Holder Assembly	端子台組	1
27	W25-27	Air Cylinder	氣缸	1
28	W25-28	Plunger	柱塞接頭	1
29	W25-29	Cylinder Bracket	氣缸座	1
30	W25-30	Solenoid Valve Assembly	電磁閥組	1
31	P16-28	Regulator	氣壓錶	1
32	P14-6	L" Connector	L’’形風管接頭	1
33	P14-4	Air Tube(4x2.5mm)(Blue)	風管(4x2.5)(藍)	3
34	W25-34	Y"Connector (4mm)	Y型接頭	1
35	W25-35	Air Tube(6x4mm) (L=100cm)	風管(6x4mm)	1
36	W25-36	Connector	風管接頭	4
37	W23-28	Cord Clamp (UC-1,1/4")	線套	1
38				
39	W25-39	Connector (M5-T4)	可調式風管接頭	1

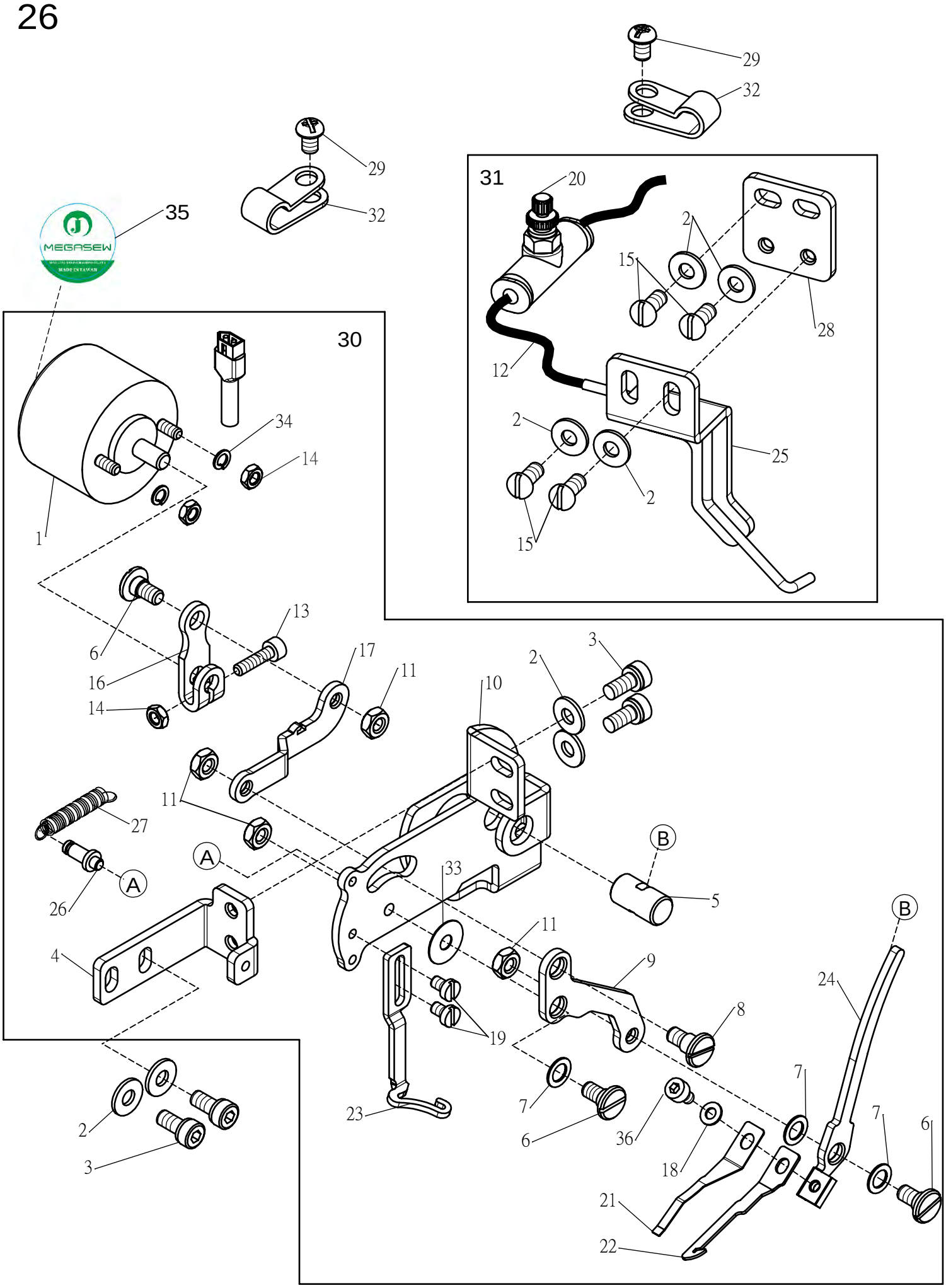
29
32
29
32
35
MEGASEW
31
20
2
15
28
12
2
25
2
15
30
34
14
1
13
6
17
16
11
14
2
3
10
11
27
A
A
26
33
B
5
4
11
9
B
24
8
19
7
7
7
6
23
6
36
18
2
3
21
22

Ref. No.	Parts No.	Description	品 名	Amt. Req.
1	W26-1	Solenoid	電磁閥	1
2	W3-25	Washer	墊片	8
3	P13-2	Screw (M4-0.7X8)	螺絲	4
4	W26-4	Guide	固定板	1
5	W26-5	Wiper Bar Guide	撥線搖臂導塊	1
6	W26-6	Screw (M4-0.7X6)	螺絲	3
7	W26-7	Washer	墊片	3
8	W26-8	Screw (M4-0.7X5.5)	螺絲	1
9	W26-9	Solenoid Lever	電磁閥搖臂	1
10	W26-10	Solenoid Bracket	撥線器座	1
11	W26-11	Nut	螺帽	4
12	P14-4	Air Tube(4x2.5mm)(Blue)	風管(4x2.5)(藍)	2
13	W26-13	Screw (M3-0.5X12)	螺絲	1
14	W26-14	Nut	螺帽	3
15	W3-24	Screw (M4-0.7X8)	螺絲	4
16	W26-16	Wiper Bar	搖臂	1
17	W26-17	Link	連桿	1
18	W3-31	Washer	墊片	1
19	W3-30	Screw (M3-0.5X4.5)	螺絲	2
20	W26-20	Connector	風管接頭	1
21	W26-21	Clamp Spring	夾線彈簧片	1
22	W26-22	Wiper	撥線勾	1
23	W26-23	Top Cover Thread Guide	上飾線導板	1
24	W26-24	WiperBar	撥線搖臂	1
25	W26-25	Air Wiper	吹風撥線管	1
26	W26-26	Screw	螺絲	1
27	W26-27	Spring	彈簧	1
28	W26-28	Guide	固定板	1
29	P2-33	Screw (M4-0.7X6)	螺絲	2
30	W26-30	Electrical Type Thread Wiper Assembly	電磁式撥線器組	1
31	W26-31	Pneumatic Type Air Wiper Assembly	氣動式撥線器組	1
32	W23-28	Cord Clamp (UC-1,1/4")	線套	2
33	W26-33	Washer	墊片	1
34	W26-34	Spring Washer	彈簧華司	2
35	W26-35	Sticker	名牌貼紙	1
36	W26-36	Screw (M3-0.5X5)	螺絲	1

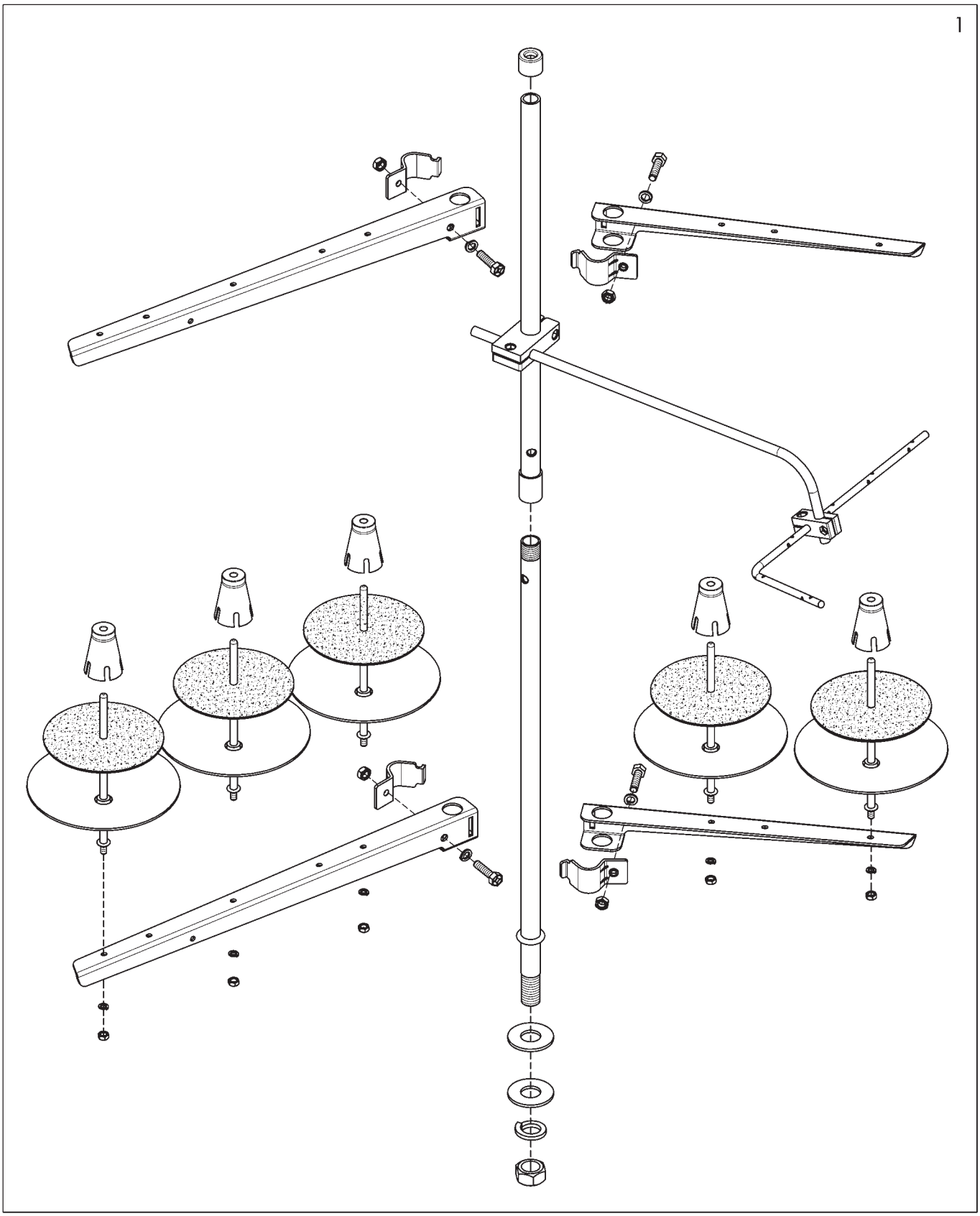
1

Ref. No.	Parts No.	Description	品　　名	Amt. Req.
1	W20-25	Thread Stand Ass.(5-Spools)	線架組	1

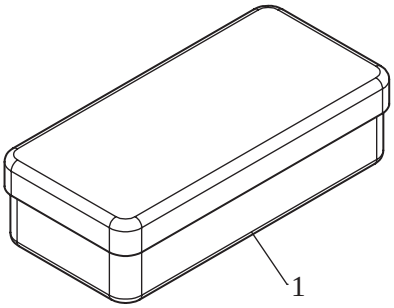
1

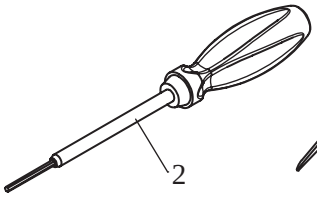
2

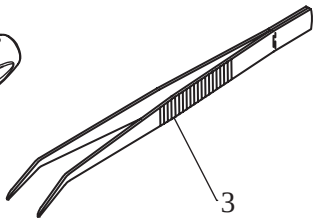
3

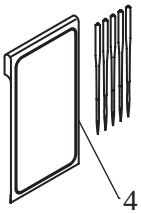
4

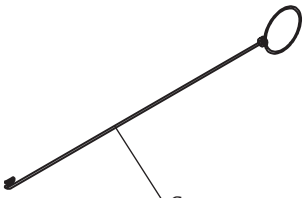
6

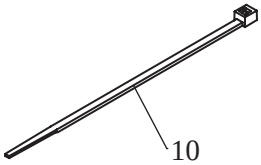
10

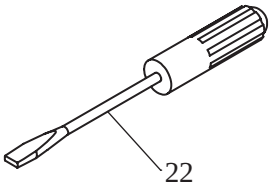
22

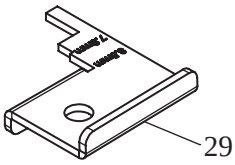
29

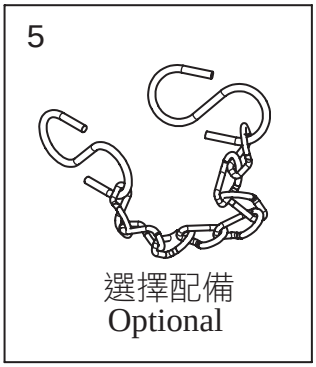
5
選擇配備
Optional

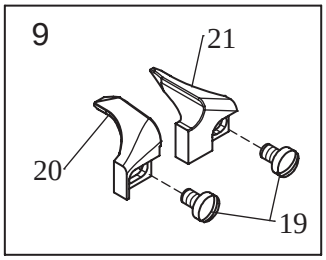
9
21
20
19

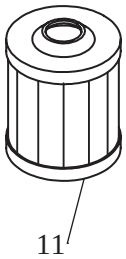
11

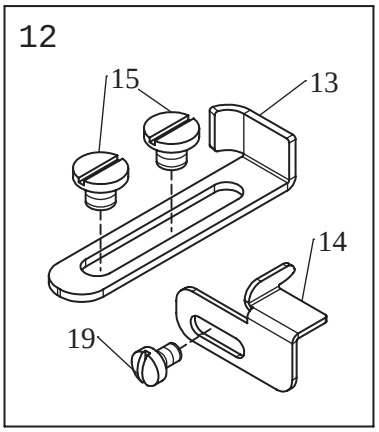
12
15
13
14
19

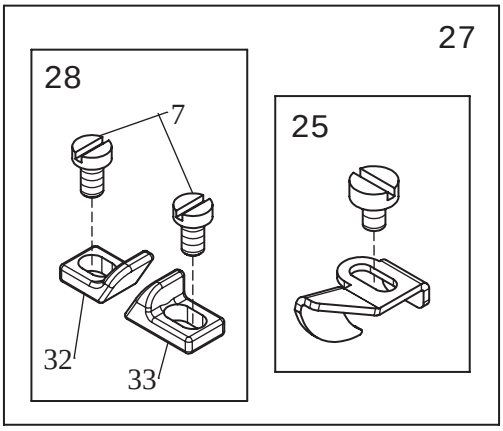
27
28
7
32
33
25

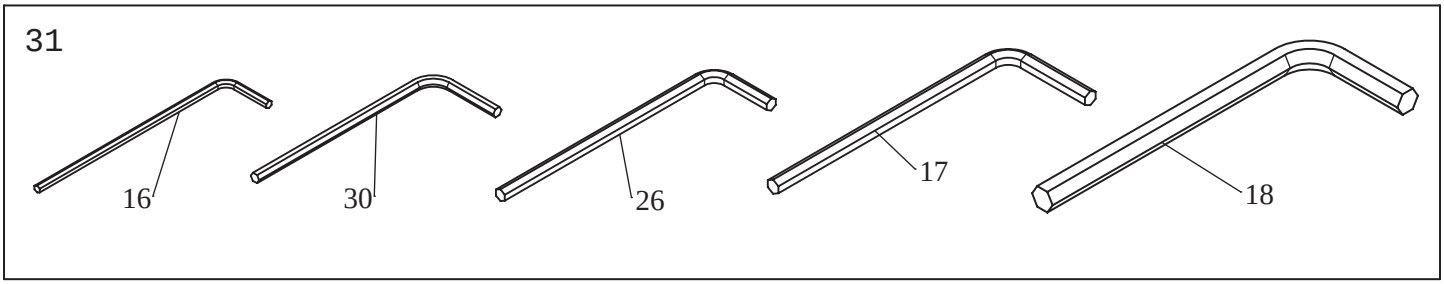
31
16
30
26
17
18

Ref. No.	Parts No.	Description	品　　名	Amt. Req.
1	P19-1	Attachment Box	附件盒	1
2	W28-2	Screwdriver	螺絲起子	1
3	P19-2	Thread Tweezers	穿線夾	1
4	W7-18	Needle	擊針	5
5	P19-18	Iron Chain	鐵鍊	1
6	P19-3	Threading Wire	穿線鐵絲	1
7	W31-30	Lower Knife	下修布固定刀	1
8				
9	W28-9	Fabric Guide Assembly	檔塊組	1
10	P13-37	Band (12cm)	束帶(12公分)	4
11	W18-22	Oil Filter	濾網	1
12	W28-12	Bright Board For Hemming	折袖下擺用之冷光板	1
13	W28-13	Bright Board	冷光板組	1
14	W22-21	Hemming set	折下擺組	1
15	W28-15	Guide	固定板	1
16	P19-20	Hexagonal Wrench (1.5mm)	內六角板手(1.5mm)	1
17	P19-5	Hexagonal Wrench (3mm)	內六角板手(3mm)	1
18	W28-18	Hexagonal Wrench (6mm)	內六角板手(6mm)	1
19	W28-19	Screw (M2.6-0.45*4)	螺絲	2
20	W28-20	Fabric Guide(Left)	檔塊(左)	1
21	W28-21	Fabric Guide(Right)	檔塊(右)	1
22	P19-7	Screwdriver	螺絲起子	1
23	W28-23	Sewing Guide For Bulging Type Seams Covering	立骨專用導布器	1
24	W28-24	Trans Former	變壓器	1
25	W28-25	Presser Foot Sewing Guide For Seams Covering	車縫押骨用之押腳分刀器	1
26	P19-6	Hexagonal Wrench (2.5mm)	內六角板手(2.5mm)	1
27	W28-27	Sewing Guide For Flattening Type Seams Covering	導骨用導布器組	1
28	W28-28	Sewing Guide For Flattening Type Seams Covering	倒骨用導布器組(適用三線烤克骨)	1
29	W28-29	Needle Height Gauge	針棒高度調節器	1
30	W28-30	Hexagonal Wrench (2mm)	內六角板手(2mm)	1
31	W28-31	Hexagonal Wrench Assembly	內六角板手組	1
32	W28-32	Subplate	輔助板	1
33	W28-33	Flat seaming guide plate	併縫檔板	2
34	W28-34	Screw (M5-0.8*6)	螺絲	2

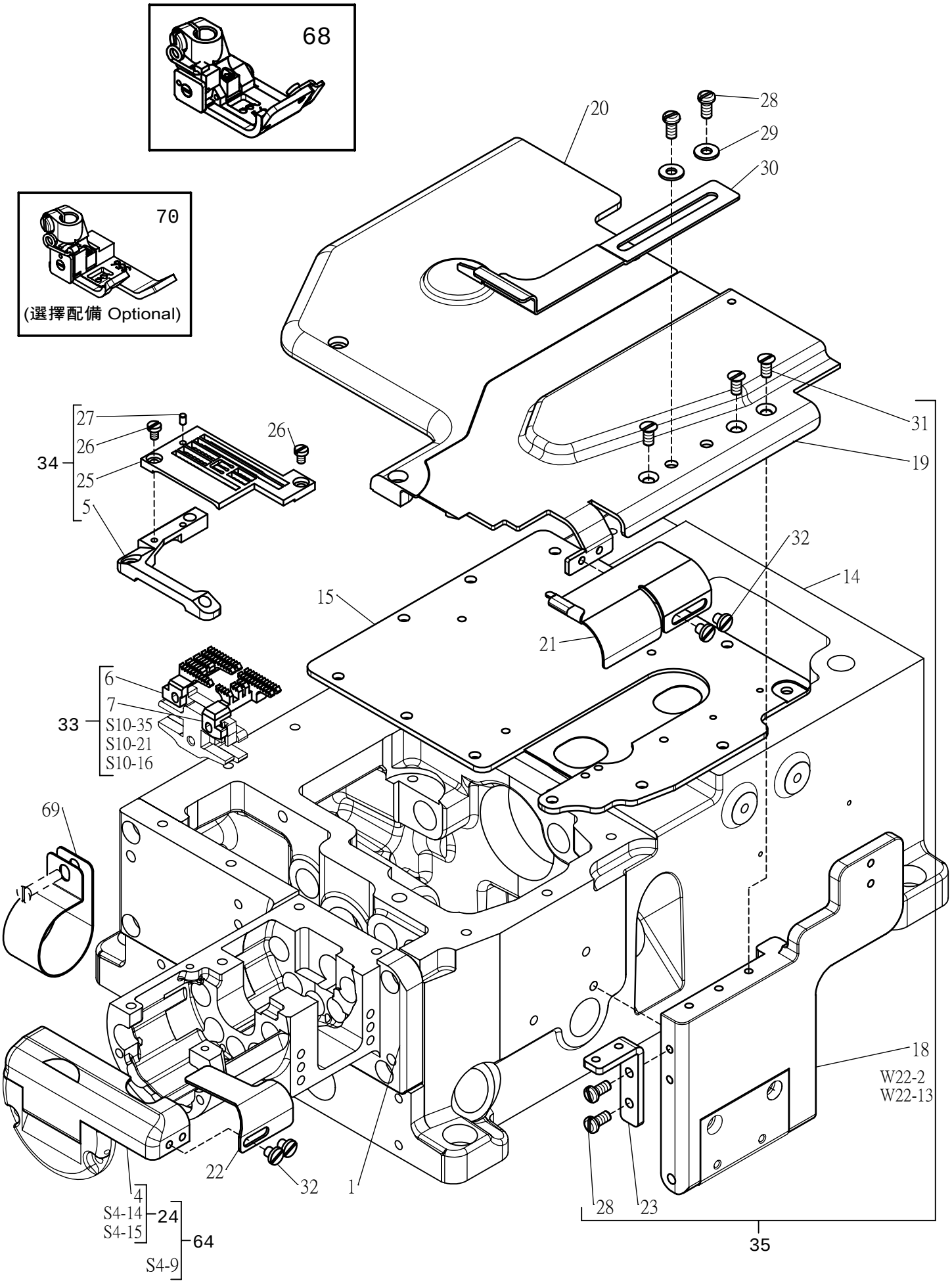
68
70
(選擇配備 Optional)
20
28
29
30
31
19
27
26
26
34
25
5
32
14
15
21
6
7
33
S10-35
S10-21
S10-16
69
18
W22-2
W22-13
22
32
1
4
S4-14
S4-15
24
64
S4-9
28
23
35

Ref. No.	Parts No.	Description	品　　名	Amt. Req.
1	S29-1	Sewing Machine Supprting Block	機座	1
2	S29-2	Suction Pipe Assembly (Upper)	集屑吸管(上)	1
3	S29-3	Suction Pipe Assembly (Lower)	集屑吸管(下)	1
4	S29-4	Side Cover	側蓋板(上)	1
5	S29-5	Bracket / Stitch Plate	針板座	1
6	S29-6	Main Feed Dog	主送布齒	1
7	S29-7	Differential Feed Dog	差動送布齒	1
8	S29-8	Upper Knife Holder	上修布活動刀座	1
9	S29-9	Lower Knife Holder	下修布固定座	1
10	S29-10	Lower Knife	下修布固定刀	1
11	S29-11	Waste Chute Clamp	切屑導引器	1
12	S29-12	Brack Complete	左修刀座	1
13	S29-13	Crank	曲柄	1
14	S29-14	Sewing Machine Supprting Block	機座	1
15	S29-15	Crank Chamber Cover	曲柄軸室蓋	1
16	S29-16	Gasket	防油墊片	1
17	S29-17	Front Cover Plate	左修刀座前蓋	1
18	S29-18	Front Cover	前蓋	1
19	S29-19	Auxiliary Plate/Front Cover	防油蓋	1
20	S29-20	Bed Cover	下座上蓋	1
21	S29-21	Hemming Guide (Left)	定規(左)	1
22	S29-22	Side Cover	側蓋板	1
23	S29-23	Bracket	支撐架	1
24	S29-24	Cover Assembly	蓋板組	1
25	W33-12	Needle Plate	針板	1
26	W3-30	Screw (M3-0.5X4.5)	螺絲	2
27	W33-33	Pin	插銷	1
28	W3-24	Screw (M4-0.7X8)	螺絲	4
29	W3-25	Washer	墊片	4
30	W33-4	Hemming Guide (Right)	定規(右)	1
31	W22-4	Screw (M4-0.7X8)	螺絲	3
32	W24-19	Screw (M4-0.7X4)	螺絲	5
33	S29-33	Feed Dog Bar Assembly	送料具固定座組	1
34	S29-34	Needle Plate Assembly	針板組	1
35	S29-35	Front Cover Assembly	前蓋組	1
36	W6-15	Screw (M5-0.8X5)	螺絲	6
37	W31-9	Shaft	軸	1
38	W31-7	Nut	螺帽	1
39	W31-5	Washer	墊片	1
40	W31-8	Crank	曲柄	1

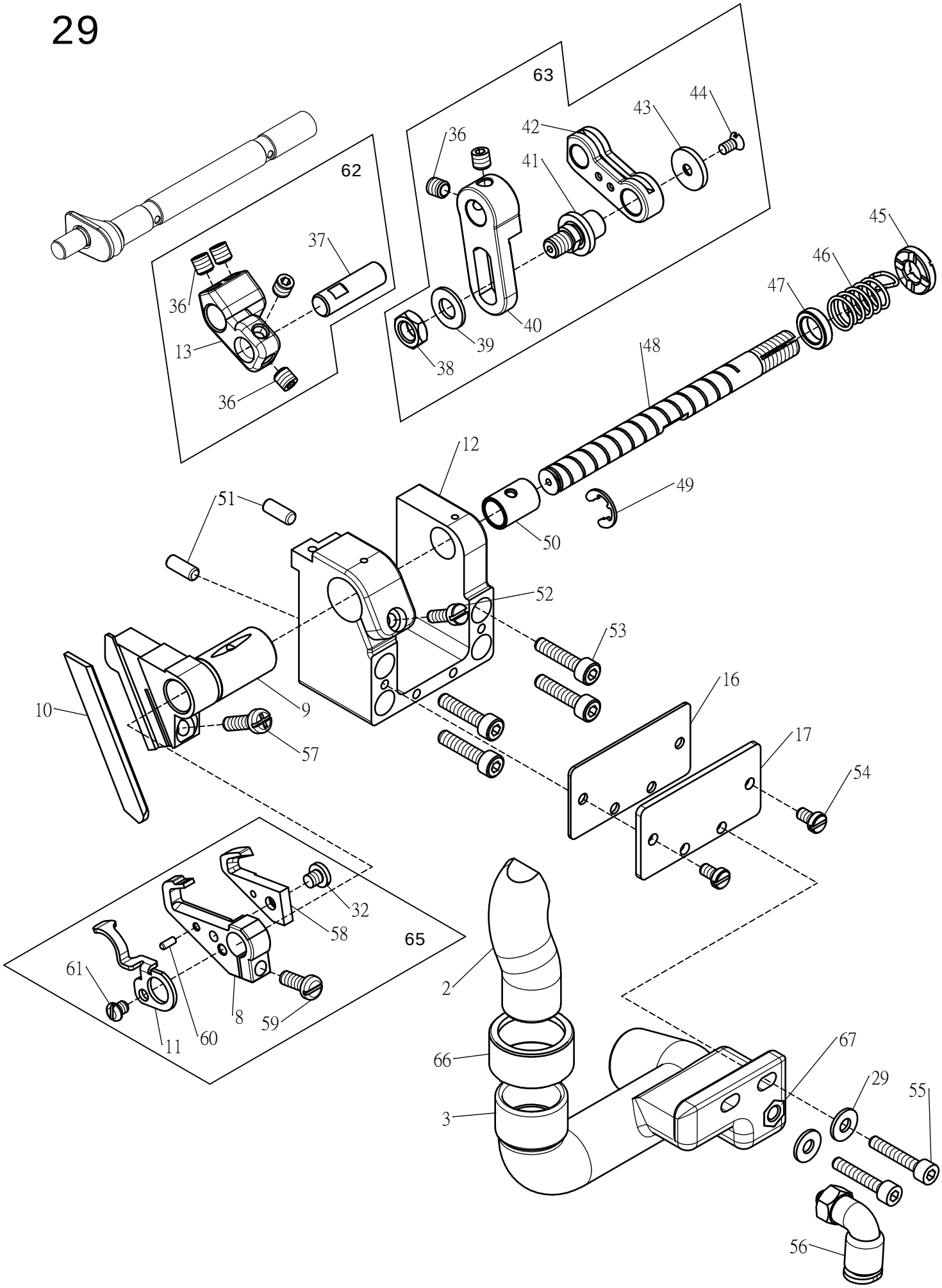
63
62
65
36
37
13
36
36
42
41
43
44
40
39
38
45
46
47
48
12
49
50
51
52
53
10
9
57
16
17
54
32
58
61
11
60
8
59
2
66
3
67
29
55
56

Ref. No.	Parts No.	Description	品　　名	Amt. Req.
41	W31-6	Crank Pin	滑塊	1
42	W31-11	Link	連桿	1
43	W9-12	Washer	墊片	1
44	W9-13	Screw (M3-0.5X6)	螺絲	1
45	W31-19	Nut	螺帽	1
46	W31-18	Spring	彈簧	1
47	W31-17	Washer	墊片	1
48	W31-16	Main Shaft	主軸	1
49	P8-10	Retaining Ring	扣環	1
50	W31-39	Bushing	銅套管	1
51	W31-23	Pin	梢	2
52	W31-14	Screw (M3.5-0.6X11)	螺絲	1
53	W10-35	Screw (M4-0.7X18)	螺絲	4
54	P7-10	Screw(M3.5-0.6X6)	螺絲	2
55	S29-55	Screw(M3.5-0.6X14)	螺絲	2
56	P26-10	L" Connector (TL6-M5M)	L’’形風管接頭 (TL6-M5M)	1
57	W31-36	Screw (M4-0.7X14)	螺絲	1
58	W31-26	Upper Knife	上修布活動刀	1
59	W13-21	Screw (M4-0.7X10)	螺絲	1
60	W31-31	Pin	梢	1
61	W31-34	Screw (M3.5-0.6X6)	螺絲	1
62	S29-62	Crank Assembly	曲柄組	1
63	S29-63	Link Assembly	連桿組	1
64	S29-64	Side Cover Assembly	側蓋板組	1
65	S29-65	Upper Knife Holder Assembly	上修布活動刀座組	1
66	S29-66	Wrap	固定套	1
67	P16-43	Nut	螺帽	1
68	W33-38	Presser Foot Assembly (Heay Material)	壓腳組（厚料用）	1
69	W33-37	Hose Band	束套	1
70	W33-29	Presser Foot Assembly	壓腳組	1

L3---S30-1
L3-1---S30-2
L4---S30-6

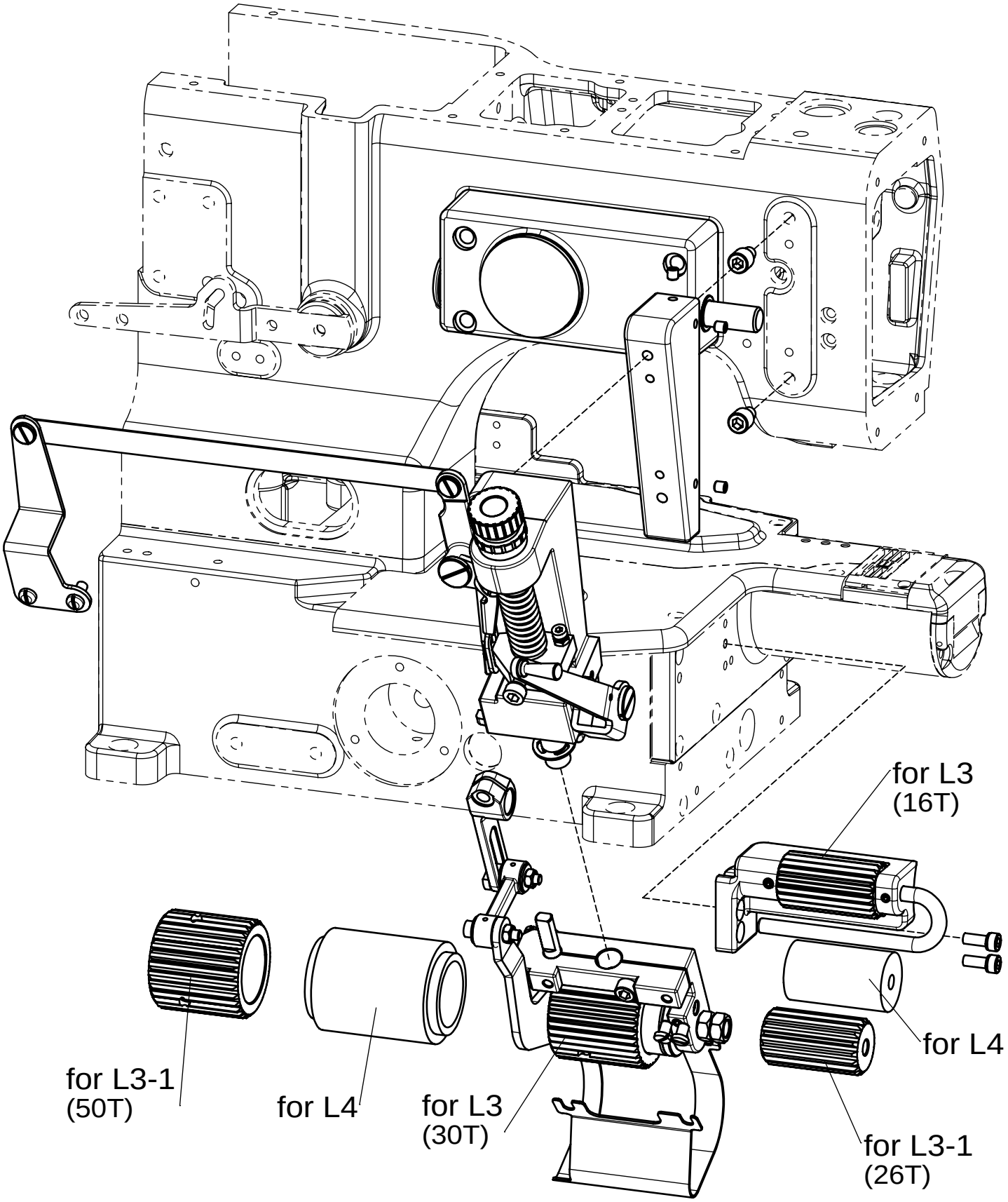

Ref. No.	Parts No.	Description	品　　名	Amt. Req.
L3	S30-1	Rear Puller Assembly (teeth type)	後拖輪組（齒輪）	1
L3-1	S30-2	Rear Puller Assembly (teeth type)	後拖輪組（齒輪）	1
L4	S30-6	Rear Puller Assembly (flat type)	後拖輪組（平輪）	1

31

SCD
密縫專用

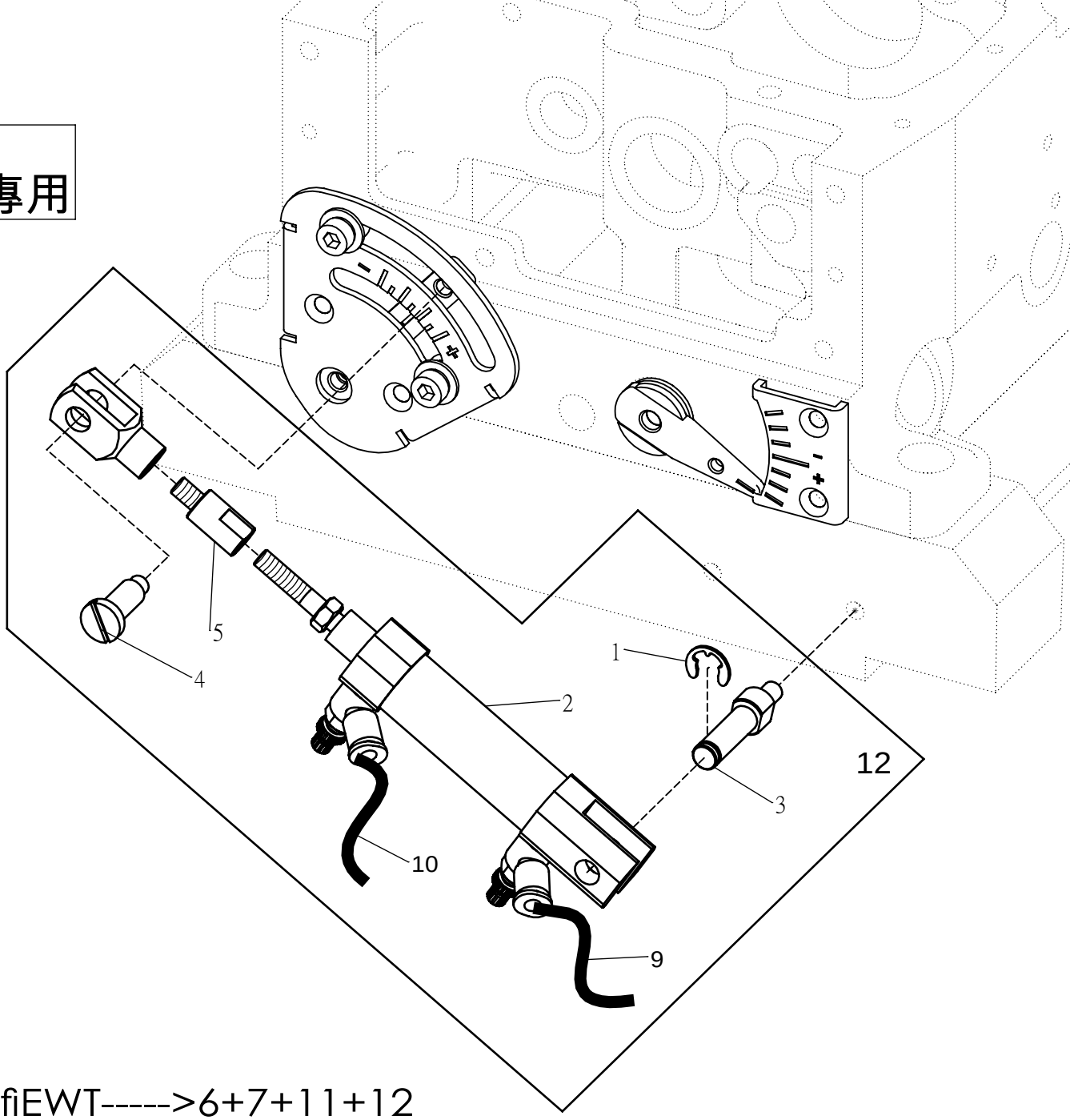

ESTfiEWT----->6+7+11+12
ASTfiAWT----->6+8+11+12

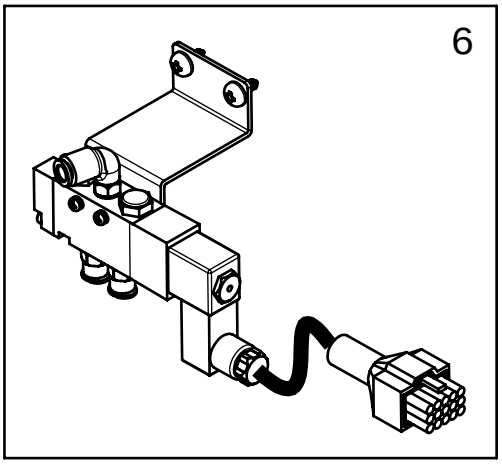

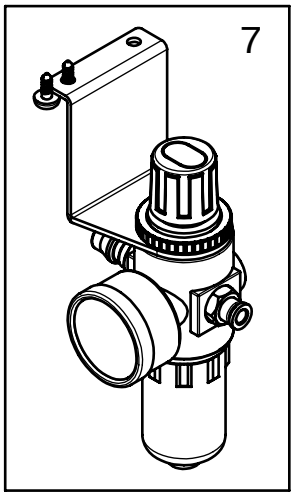

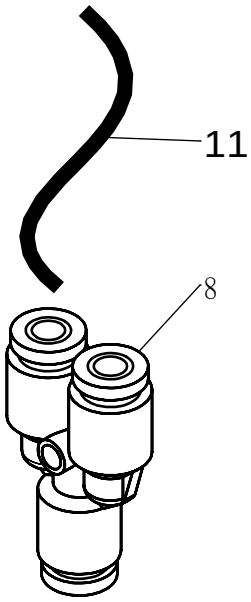

Ref. No.	Parts No.	Description	品　　名	Amt. Req.
1	P8-10	Retaining Ring	扣環	1
2	S31-2	Air Cylinder	氣缸	1
3	S31-3	Air Cylinder Pin	氣缸固定梢	1
4	S31-4	Screw (M5-0.8X4.5)	螺絲	1
5	S31-5	Plung	柱塞接頭	1
6	S31-6	Solenoid Valve Assembly	電磁閥組	1
7	P16-28	Regulator	氣壓錶	1
8	P26-11	Y"Connector (6mm)	Y型接頭	1
9	P14-4	Air Tube(4x2.5mm)(Blue) L=100cm	風管(4x2.5)(藍)	1
10	P14-5	Air Tube(4x2.5mm)(Orange) L=100cm	風管(4x2.5)(橘)	1
11	W25-35	Air Tube(6x4mm) L=60cm	風管(6x4mm)	1
12	S31-12	Air Cylinder Assembly	氣缸組	1

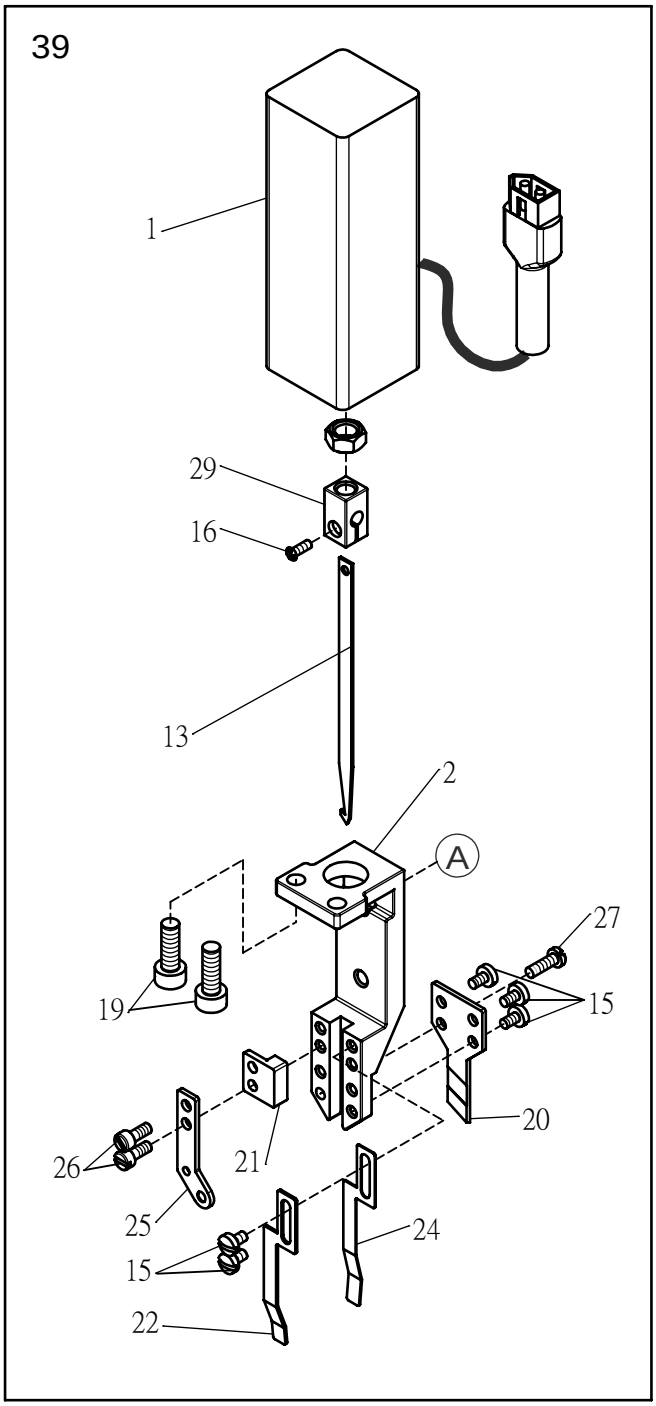
39
1
29
16
13
2
A
27
19
15
20
26
21
25
24
15
22

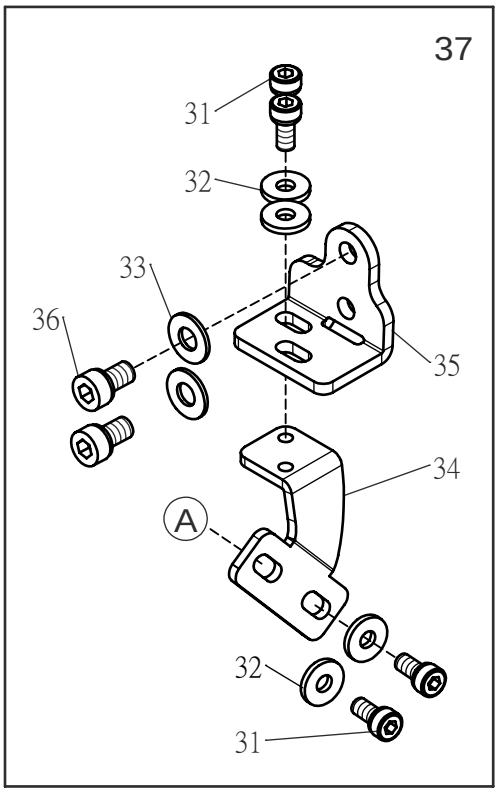
37
31
32
33
36
35
34
A
32
31

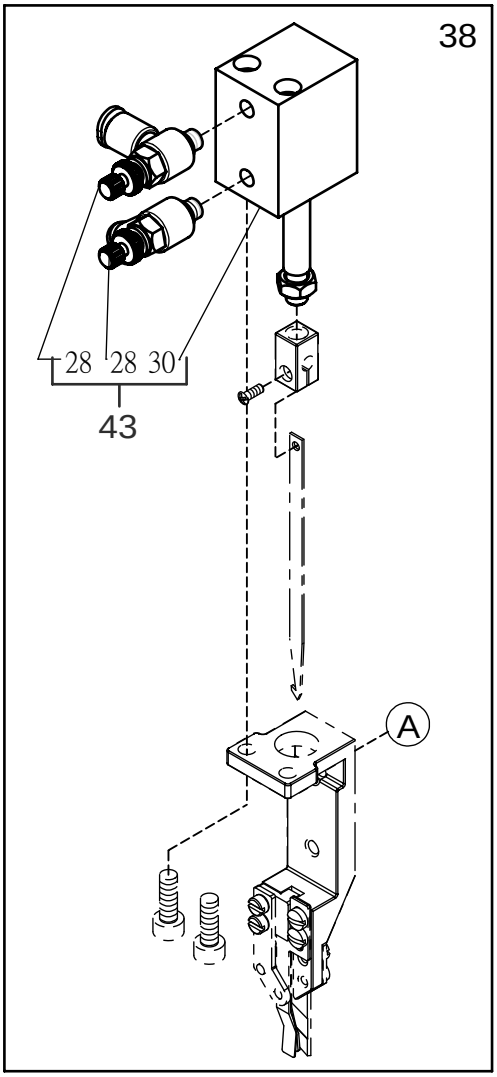
38
28
28
30
43
A

Ref. No.	Parts No.	Description	品　　名	Amt. Req.
1	W32-1	Solenoid	電磁閥	1
2	W32-2	Knife Bracket	上切刀座	1
13	W32-13	Movable Trimming knife	上活動刀片	1
15	W16-6	Screw (M2.5-0.45X4)	螺絲	5
16	W32-16	Screw (M2-0.4X6.1)	螺絲	1
18				
19	W7-10	Screw (M4-0.7X12)	螺絲	2
20	W32-20	Fixed Trimming Knife	下切刀	1
21	W32-21	Pressure Adjusting Piece Spacer	壓力調整隔片	1
22	W32-22	Clamp Spring Pressure	夾線壓力片	1
23				
24	W32-24	Thread Clamp	夾線片	1
25	W32-25	Clamp Spring Pressure Adjusting Piece	上切刀壓力調整片	1
26	W32-26	Screw (M2.5-0.45X6)	螺絲	2
27	W32-27	Screw (M2.5-0.45X8)	螺絲	1
28	W25-39	Connector	風管接頭	2
29	W32-29	Movable Knife Holder	上切刀台	1
30	W32-30	Air Cylinder	氣缸	1
31	P13-2	Screw (M4-0.7X8)	螺絲	4
32	W10-33	Washer	墊片	4
33	P8-8	Washer	墊片	2
34	W32-34	Guide	固定板	1
35	W32-35	Guide	固定板	1
36	W21-18	Screw (M5-0.8X8)	螺絲	2
37	W32-37	Guide, C.Set	固定板組	1
38	W32-38	Pneumatic Type Top Trimmer Assembly	氣動式上切刀組	1
39	W32-39	Electrical Type Top Trimmer Assembly	電磁式上切刀組	1
43	W32-43	Air Cylinder Assembly	氣缸組	1

經銷商：

名匠縫紉機股份有限公司

2013.01